LANDMASTER

ILLUSTRATED PARTS LIST

This Illustrated Parts List covers the following 2023 & 2024 model Landmaster made Utility Vehicles

AMP RVR

4x2 ELECTRIC POWERED UTILITY VEHICLE

ITEM NO.	PART NUMBER	DESCRIPTION	QTY.
1	19806	BRKT, SKID PLATE EV 4X4	1
2	19440	AXLE, TRANSAXLE IRS 12.44:1 EV 4WD 024AS103-1 SEE SPECS	1
3	19808	BOLT, 1/4-20 FLANGED HEX HEAD GR5 ZN	6
4	19809	NUT, 1/4-20 FLANGED NYLOCK ZN	6
5	19518	BOLT, 3/8-16 X 2.75 G5 HHCS ZN BLUE PATCHLOCK	6
6	19519	BOLT, 3/8-16 X 1 HEX HEAD G5	6
7	18697	CAP, ID .96" - 1.07" SNAP IN	2

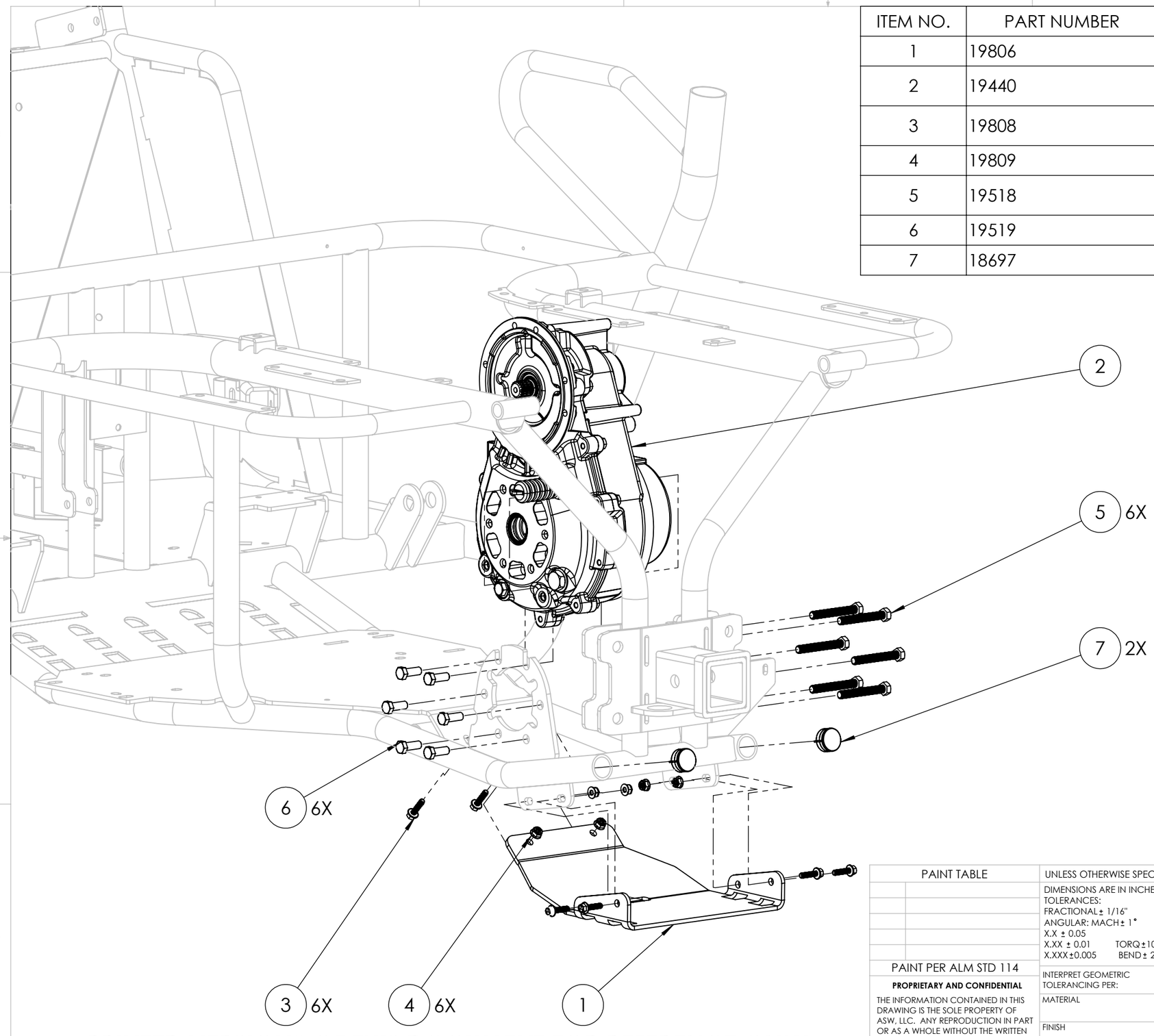

**** PRINTED VERSIONS OF THIS DOCUMENT FOR REFERENCE ONLY ****

PAINT TABLE

PAINT PER ALM STD 114

PROPRIETARY AND CONFIDENTIAL

THE INFORMATION CONTAINED IN THIS DRAWING IS THE SOLE PROPERTY OF ASW, LLC. ANY REPRODUCTION IN PART OR AS A WHOLE WITHOUT THE WRITTEN PERMISSION OF ASW, LLC IS PROHIBITED.

UNLESS OTHERWISE SPECIFIED:

DIMENSIONS ARE IN INCHES
TOLERANCES:
FRACTIONAL ± 1/16"
ANGULAR: MACH ± 1°
X.X ± 0.05
X.XX ± 0.01 TORQ ±10%
X.XXX ±0.005 BEND ± 2°

INTERPRET GEOMETRIC TOLERANCING PER:

MATERIAL

FINISH

DO NOT SCALE DRAWING

	NAME	DATE
DRAWN		
CHECKED		
ENG APPR.		
MFG APPR.		
Q.A.		

COMMENTS:

AMERICAN LANDMASTER

MOTOR & TRANS ASSEMBLY 1

SIZE	DWG. NO.	REV
B	CA00076	0

SCALE: 1:5 WEIGHT: SHEET 1 OF 1

ITEM NO.	PART NUMBER	DESCRIPTION	QTY.
1	19919	MOTOR, 32V, 3-PHASE AC, SCHABMULLER	1
2	2-50087	BOLT, 1/4"-20 X 1"	6
3	2-50717	WASHER, 1/4IN SAE FLAT	6
4	2-50716	WASHER, 1/4IN LOCKWASHER	6

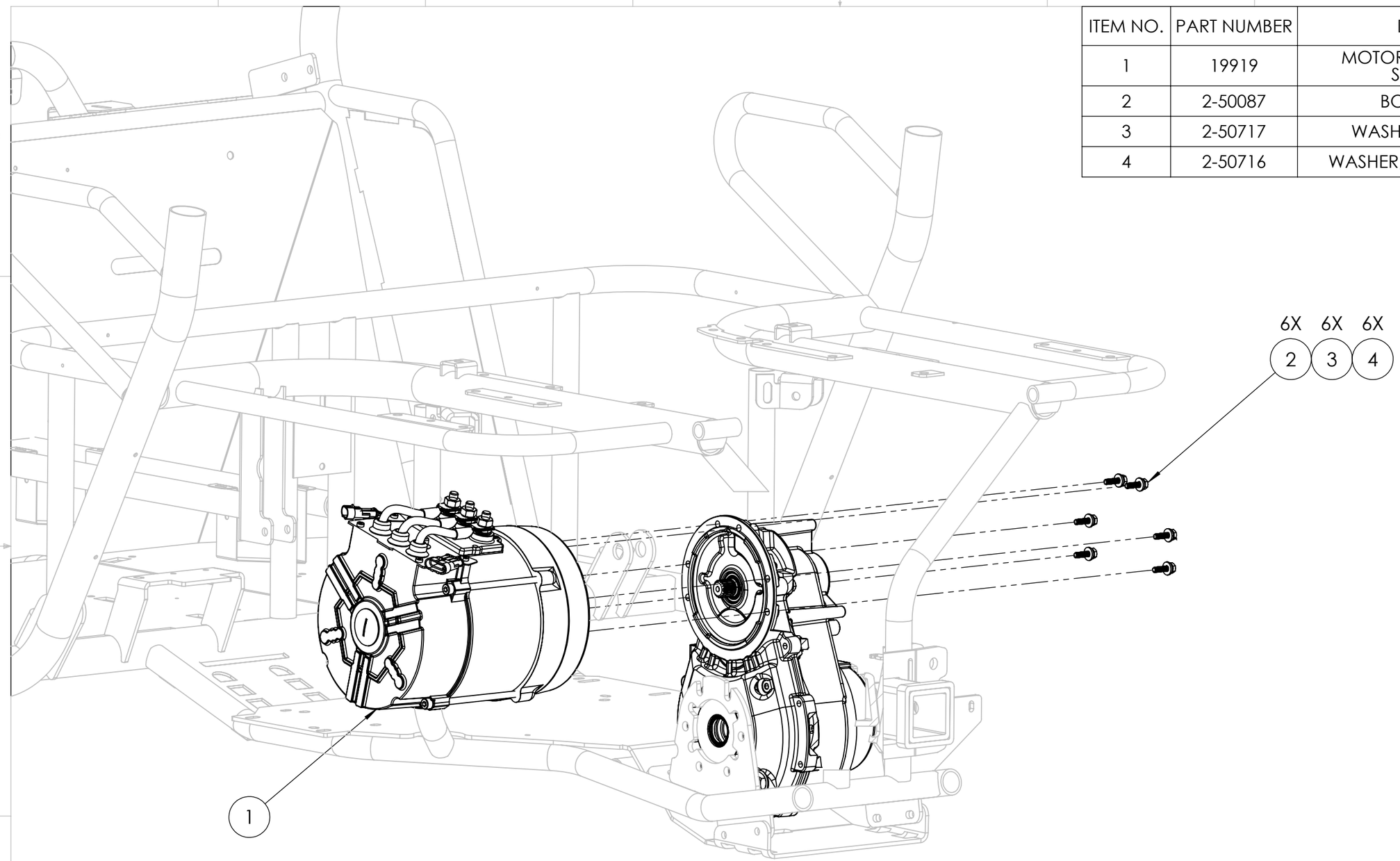

PAINT TABLE

PAINT PER ALM STD 114

PROPRIETARY AND CONFIDENTIAL

THE INFORMATION CONTAINED IN THIS DRAWING IS THE SOLE PROPERTY OF ASW, LLC. ANY REPRODUCTION IN PART OR AS A WHOLE WITHOUT THE WRITTEN PERMISSION OF ASW, LLC IS PROHIBITED.

UNLESS OTHERWISE SPECIFIED:

DIMENSIONS ARE IN INCHES
TOLERANCES:
FRACTIONAL ± 1/16"
ANGULAR: MACH ± 1°
X.X ± 0.05
X.XX ± 0.01 TORQ ±10%
X.XXX ±0.005 BEND ± 2°

INTERPRET GEOMETRIC TOLERANCING PER:

MATERIAL

FINISH

DO NOT SCALE DRAWING

	NAME	DATE
DRAWN		
CHECKED		
ENG APPR.		
MFG APPR.		
Q.A.		

COMMENTS:

AMERICAN LANDMASTER

MOTOR & TRANS ASSEMBLY 2

SIZE	DWG. NO.	REV
B	CA00076	0

SCALE: 1:5 WEIGHT: SHEET 1 OF 1

**** PRINTED VERSIONS OF THIS DOCUMENT FOR REFERENCE ONLY ****

ITEM NO.	PART NUMBER	DESCRIPTION	QTY.
1	19822	BRKT, DIFF LOCK TOGGLE EV 4X4	1
2	16868	NUT, M12 X 1.25 INTERFERENCE TOP LOCK	1
3	19817	SPRING, EXTENSION 2.5IN - 4.4LBS/IN	1

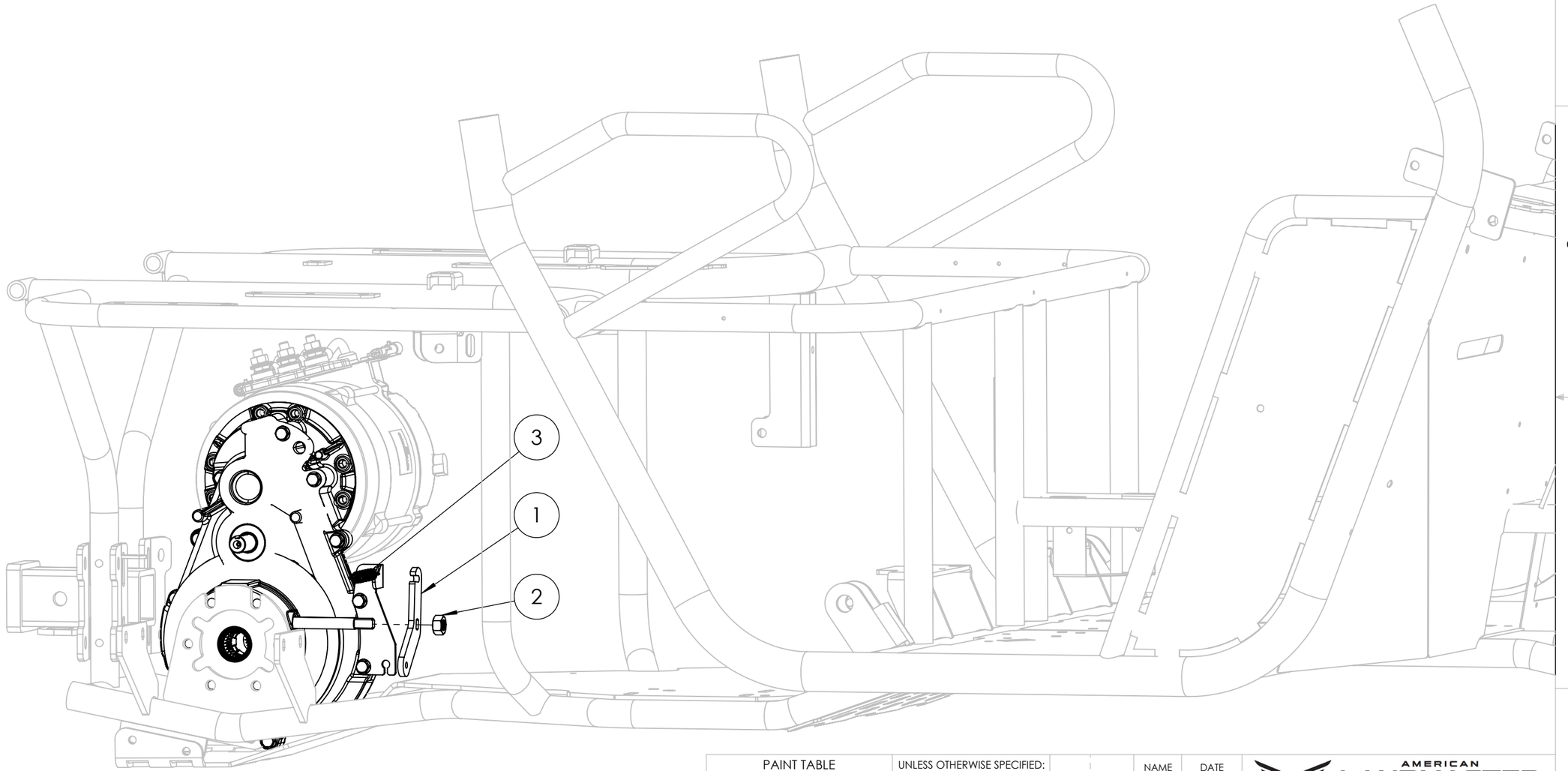

PAINT TABLE

PAINT PER ALM STD 114

PROPRIETARY AND CONFIDENTIAL

THE INFORMATION CONTAINED IN THIS DRAWING IS THE SOLE PROPERTY OF ASW, LLC. ANY REPRODUCTION IN PART OR AS A WHOLE WITHOUT THE WRITTEN PERMISSION OF ASW, LLC IS PROHIBITED.

UNLESS OTHERWISE SPECIFIED:
DIMENSIONS ARE IN INCHES
TOLERANCES:
FRACTIONAL ± 1/16"
ANGULAR: MACH ± 1°
X.X ± 0.05
X.XX ± 0.01 TORQ ± 10%
X.XXX ± 0.005 BEND ± 2°

INTERPRET GEOMETRIC TOLERANCING PER:

MATERIAL

FINISH

DO NOT SCALE DRAWING

	NAME	DATE
DRAWN		
CHECKED		
ENG APPR.		
MFG APPR.		
Q.A.		

COMMENTS:

AMERICAN LANDMASTER

MOTOR & TRANS ASSEMBLY 3

SIZE	DWG. NO.	REV
B	CA00076	0

SCALE: 1:5 WEIGHT: SHEET 1 OF 1

**** PRINTED VERSIONS OF THIS DOCUMENT FOR REFERENCE ONLY ****

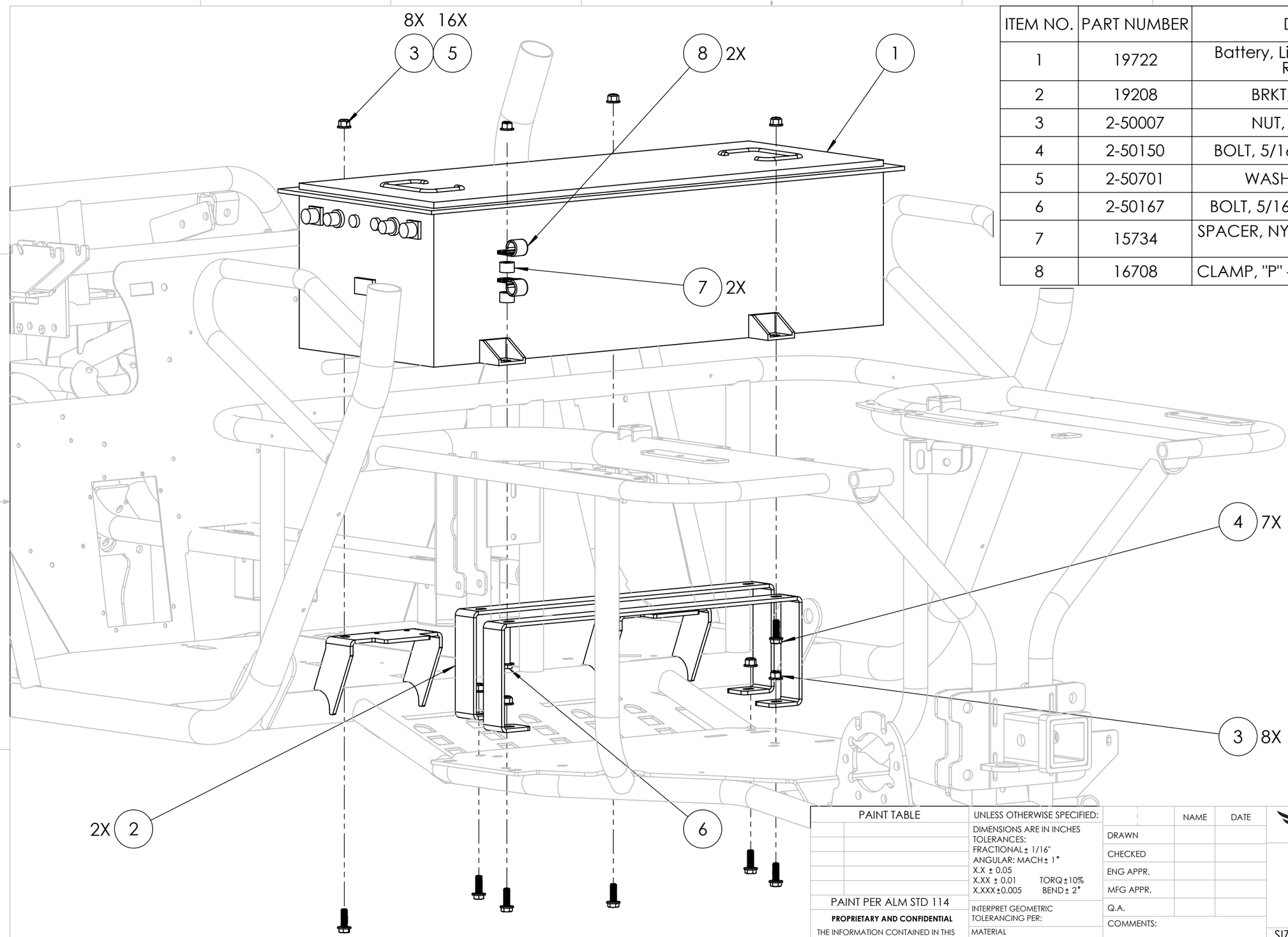

ITEM NO.	PART NUMBER	DESCRIPTION	QTY.
1	19722	Battery, Lithium, 160 amp hour, Roypow 160P	1
2	19208	BRKT, EV LG BAT. SPPT	2
3	2-50007	NUT, 5/16-18 NYLOCK	8
4	2-50150	BOLT, 5/16-18 X 1 HEX HEAD G5	7
5	2-50701	WASHER, 5/16 SAE FLAT	16
6	2-50167	BOLT, 5/16IN X 2IN HEX HEAD G5	1
7	15734	SPACER, NYLON 3/4" OD X 3/8" ID X 1/2" L	2
8	16708	CLAMP, "P" - 5/8" BUNDLE; 3/8" BOLT	2

**** PRINTED VERSIONS OF THIS DOCUMENT FOR REFERENCE ONLY ****

PAINT TABLE

PAINT PER ALM STD 114

PROPRIETARY AND CONFIDENTIAL

THE INFORMATION CONTAINED IN THIS DRAWING IS THE SOLE PROPERTY OF ASW, LLC. ANY REPRODUCTION IN PART OR AS A WHOLE WITHOUT THE WRITTEN PERMISSION OF ASW, LLC IS PROHIBITED.

UNLESS OTHERWISE SPECIFIED:
DIMENSIONS ARE IN INCHES
TOLERANCES:
FRACTIONAL ± 1/16"
ANGULAR: MACH ± 1°
X.X ± 0.05
X.XX ± 0.01 TORQ ± 10%
X.XXX ± 0.005 BEND ± 2°

INTERPRET GEOMETRIC TOLERANCING PER:

MATERIAL

FINISH

DO NOT SCALE DRAWING

	NAME	DATE
DRAWN		
CHECKED		
ENG APPR.		
MFG APPR.		
Q.A.		

COMMENTS:

AMERICAN LANDMASTER

BATTERY ASSEMBLY

SIZE	DWG. NO.	REV
B	CA00076	0

SCALE: 1:5 WEIGHT: SHEET 1 OF 1

ITEM NO.	PART NUMBER	DESCRIPTION	QTY.
1	18594	ASM, REAR CORNER MODULE	1
2	2-11124	BRAKE CALIPER-RAZORBACK (99-22664)	1
3	2-11168	BRAKE MOUNT PINS-RAZORBACK (05-17221)	2
4	2-11169	BRAKE, RETAINING CLIPS-SMALL-RAZORBACK	2
5	2-11167	BRAKE PADS-RAZORBACK, TYPE 98 (33-23194)	2
6	19516	SPRING, .75" LONG X .5 OD X 0.376" ID	2

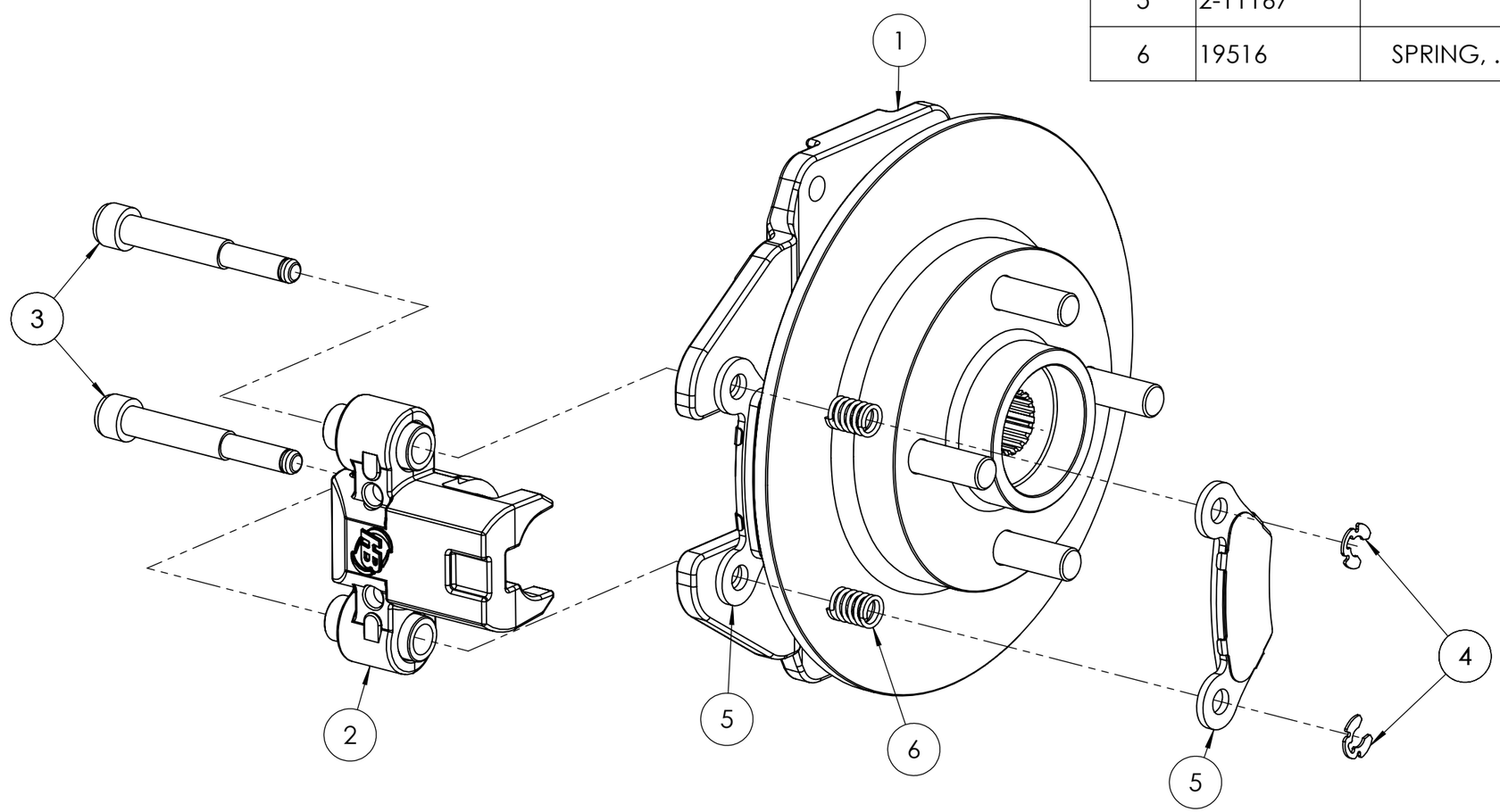

PAINT TABLE

PAINT PER ALM STD 114

PROPRIETARY AND CONFIDENTIAL

THE INFORMATION CONTAINED IN THIS DRAWING IS THE SOLE PROPERTY OF ASW, LLC. ANY REPRODUCTION IN PART OR AS A WHOLE WITHOUT THE WRITTEN PERMISSION OF ASW, LLC IS PROHIBITED.

UNLESS OTHERWISE SPECIFIED:

DIMENSIONS ARE IN INCHES
TOLERANCES:
FRACTIONAL ± 1/16"
ANGULAR: MACH ± 1°
X.X ± 0.05
X.XX ± 0.01 TORQ ±10%
X.XXX ±0.005 BEND ± 2°

INTERPRET GEOMETRIC TOLERANCING PER:

MATERIAL

FINISH

DO NOT SCALE DRAWING

	NAME	DATE
DRAWN		
CHECKED	XXX	
ENG APPR.		
MFG APPR.		
Q.A.		

COMMENTS:

AMERICAN LANDMASTER

REAR HUB ASSEMBLY

SIZE	DWG. NO.	REV
B	CA00076	0

SCALE: 1:10 WEIGHT: SHEET 1 OF 1

**** PRINTED VERSIONS OF THIS DOCUMENT FOR REFERENCE ONLY ****

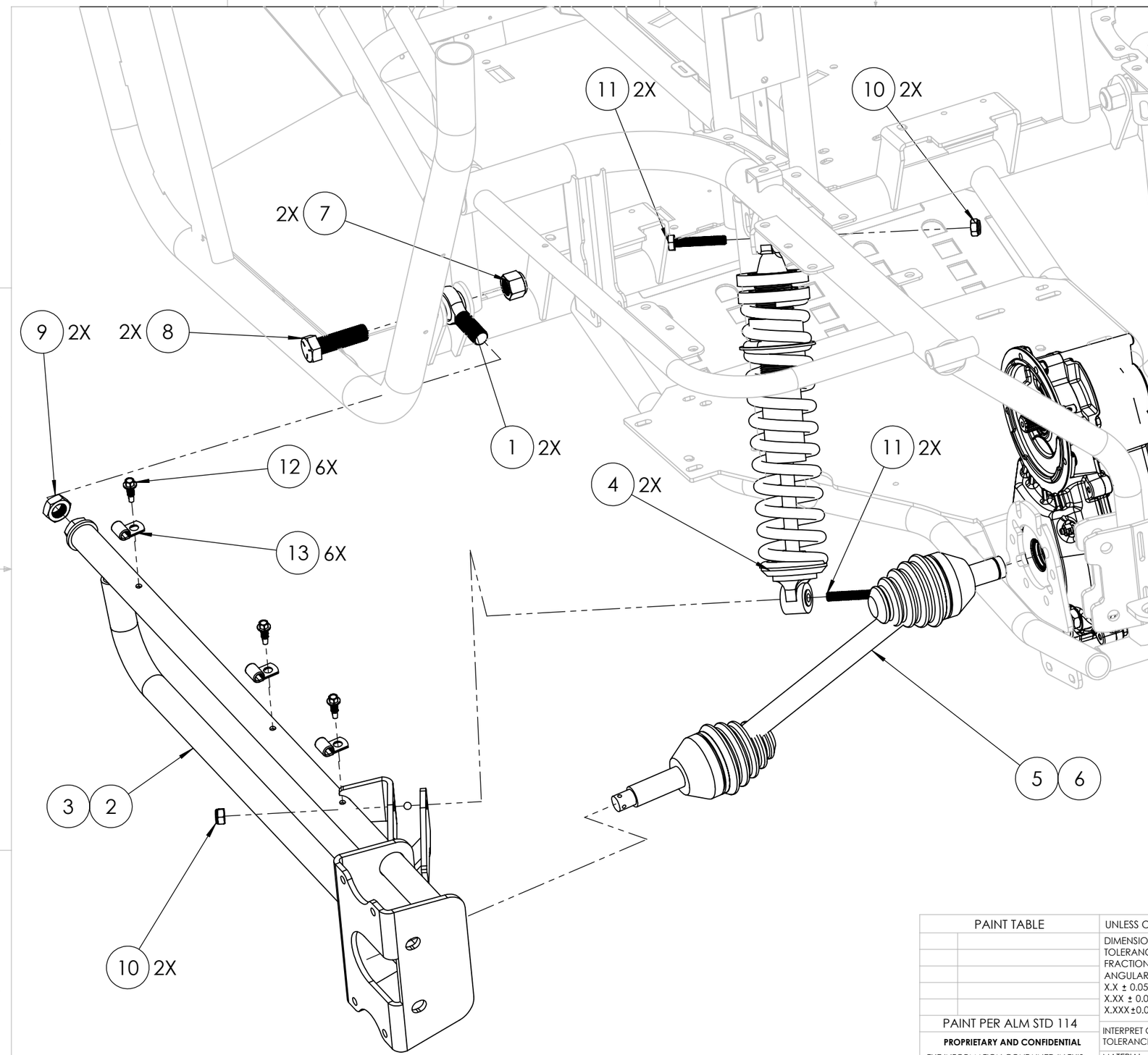

ITEM NO.	PART NUMBER	DESCRIPTION	QTY.
1	18565	ROD END, 3/4	2
2	17496-1	WDMT, TRAILING ARM LH-56"-RAW	1
3	18054-1	WDMT, TRAILING ARM RH -56-RAW	1
4	17479	SHOCK, DUAL RATE 400/900	2
5	19845	SHAFT, CV RR 56 PAXL-35005S	1
6	19846	SHAFT, CV LR 56 PAXL-35006S	1
7	2-50020	NUT, 3/4-16 NYLOCK	2
8	2-50280	BOLT, 3/4IN X 2-1/2IN-HH G5-FT	2
9	18705	NUT, 3/4-16 JAM	2
10	2-50065	NUT, M10 X 1.5 NYLON LOCKING	4
11	18702	BOLT, M10X1.5 X 60MM HIGH STRENGTH	4
12	19076	SCREW, 5/16 X1.00 UNSLT HWSDS	6
13	16577	CLAMP, "P" - 5/16" BUNDLE; M10 BOLT	6

**** PRINTED VERSIONS OF THIS DOCUMENT FOR REFERENCE ONLY ****

PAINT TABLE

PAINT PER ALM STD 114

PROPRIETARY AND CONFIDENTIAL

THE INFORMATION CONTAINED IN THIS DRAWING IS THE SOLE PROPERTY OF ASW, LLC. ANY REPRODUCTION IN PART OR AS A WHOLE WITHOUT THE WRITTEN PERMISSION OF ASW, LLC IS PROHIBITED.

UNLESS OTHERWISE SPECIFIED:

DIMENSIONS ARE IN INCHES
TOLERANCES:
FRACTIONAL ± 1/16"
ANGULAR: MACH ± 1°
X.X ± 0.05
X.XX ± 0.01 TORQ ±10%
X.XXX ±0.005 BEND ± 2°

INTERPRET GEOMETRIC TOLERANCING PER:

MATERIAL

FINISH

DO NOT SCALE DRAWING

	NAME	DATE
DRAWN		
CHECKED		
ENG APPR.		
MFG APPR.		
Q.A.		

COMMENTS:

AMERICAN LANDMASTER

REAR SUSPENSION ASSEMBLY 1

SIZE	DWG. NO.	REV
B	CA00076	0

SCALE: 1:5 WEIGHT: SHEET 1 OF 1

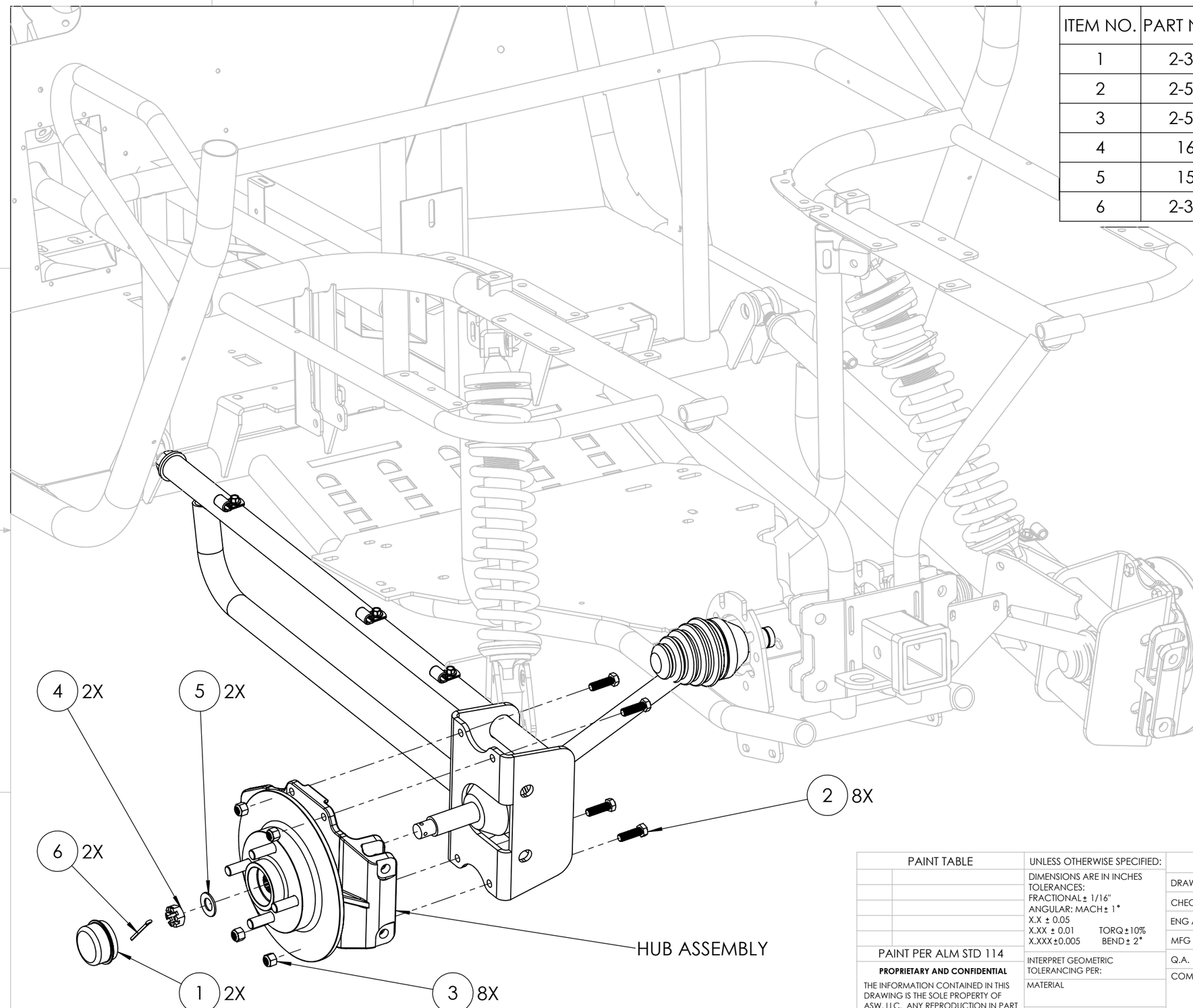

ITEM NO.	PART NUMBER	DESCRIPTION	QTY.
1	2-30623	HUB, UTV-DUST CAP	2
2	2-50215	BOLT, 3/8IN X 1-1/4IN HEX HEAD G5	8
3	2-50010	NUT, 3/8-16 NYLOCK	8
4	16625	NUT, M16 X 1.5 CASTLE	2
5	15384	WASHER, BELLEVILLE M16	2
6	2-30621	HUB-UTV-COTTER PIN	2

**** PRINTED VERSIONS OF THIS DOCUMENT FOR REFERENCE ONLY ****

PAINT TABLE

PAINT PER ALM STD 114

PROPRIETARY AND CONFIDENTIAL

THE INFORMATION CONTAINED IN THIS DRAWING IS THE SOLE PROPERTY OF ASW, LLC. ANY REPRODUCTION IN PART OR AS A WHOLE WITHOUT THE WRITTEN PERMISSION OF ASW, LLC IS PROHIBITED.

UNLESS OTHERWISE SPECIFIED:
DIMENSIONS ARE IN INCHES
TOLERANCES:
FRACTIONAL ± 1/16"
ANGULAR: MACH ± 1°
X.X ± 0.05
X.XX ± 0.01 TORQ ± 10%
X.XXX ± 0.005 BEND ± 2°

INTERPRET GEOMETRIC TOLERANCING PER:

MATERIAL

FINISH

DO NOT SCALE DRAWING

	NAME	DATE
DRAWN		
CHECKED		
ENG APPR.		
MFG APPR.		
Q.A.		

COMMENTS:

AMERICAN LANDMASTER

REAR SUSPENSION ASSEMBLY 2

SIZE	DWG. NO.	REV
B	CA00076	0

SCALE: 1:5 WEIGHT: SHEET 1 OF 1

ITEM NO.	PART NUMBER	DESCRIPTION	QTY.
1	17981	ASM, RADIUS ARM 56" OAW	4
2	17978	ROD END, 1/2-20 LH	4
3	17979	ROD END, 1/2-20 RH	4
4	2-50249	BOLT, 1/2IN-20 X 2.5 IN FT HH	8
5	17982	NUT, 1/2-20 THIN RH	4
6	17983	NUT, 1/2-20 THIN LH	4
7	18046	SPACER, .7 X .5 X .285	8
8	18693	NUT, 1/2-20 NYLOCK	8

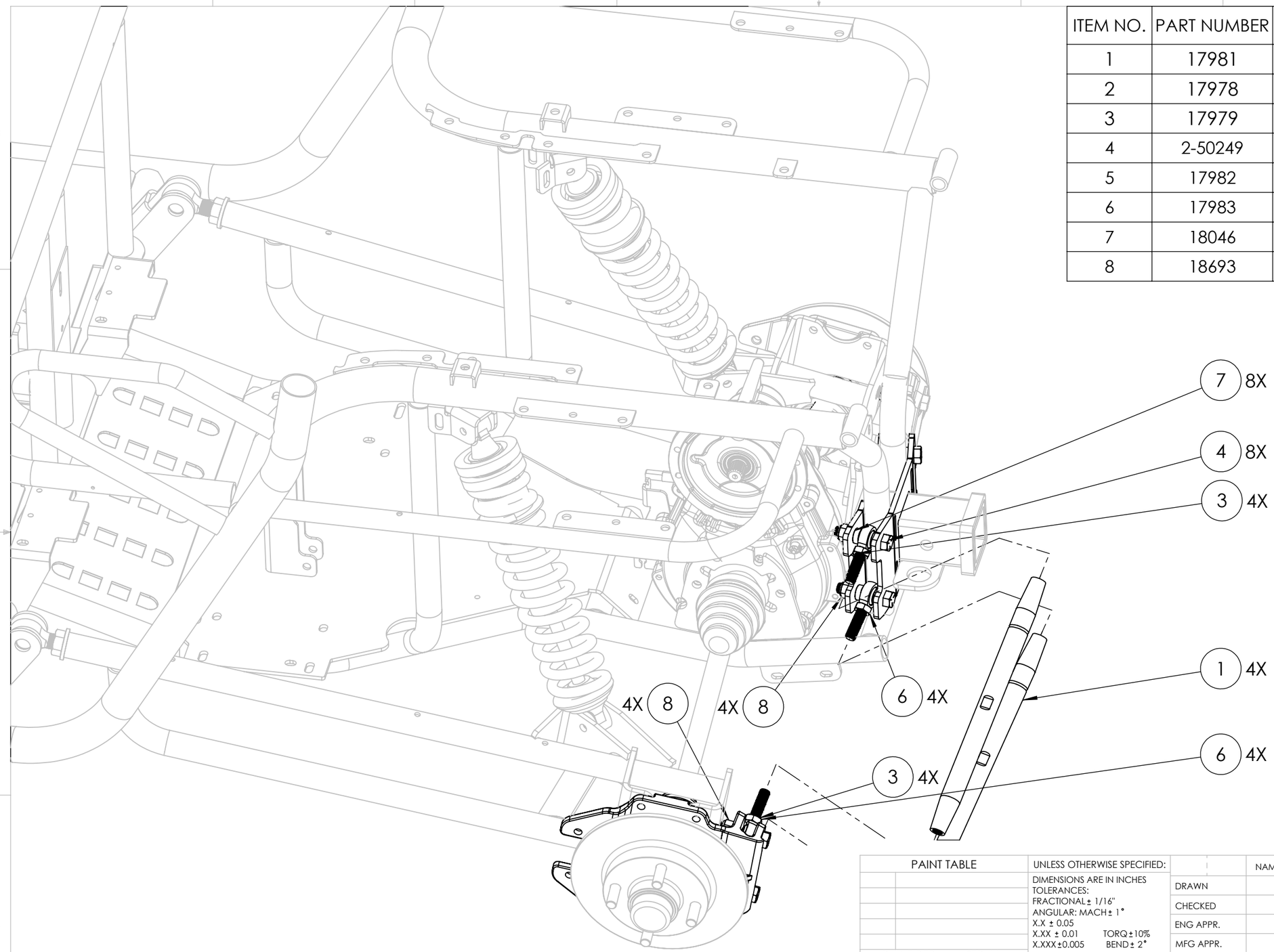

PAINT TABLE

PAINT PER ALM STD 114

PROPRIETARY AND CONFIDENTIAL

THE INFORMATION CONTAINED IN THIS DRAWING IS THE SOLE PROPERTY OF ASW, LLC. ANY REPRODUCTION IN PART OR AS A WHOLE WITHOUT THE WRITTEN PERMISSION OF ASW, LLC IS PROHIBITED.

UNLESS OTHERWISE SPECIFIED:

DIMENSIONS ARE IN INCHES
TOLERANCES:
FRACTIONAL ± 1/16"
ANGULAR: MACH ± 1°
X.X ± 0.05
X.XX ± 0.01 TORQ ±10%
X.XXX ±0.005 BEND ± 2°

INTERPRET GEOMETRIC TOLERANCING PER:

MATERIAL

FINISH

DO NOT SCALE DRAWING

	NAME	DATE
DRAWN		
CHECKED		
ENG APPR.		
MFG APPR.		
Q.A.		

COMMENTS:

AMERICAN LANDMASTER

REAR SUSPENSION ASSEMBLY 3

SIZE	DWG. NO.	REV
B	CA00076	0

SCALE: 1:5 WEIGHT: SHEET 1 OF 1

**** PRINTED VERSIONS OF THIS DOCUMENT FOR REFERENCE ONLY ****

ITEM NO.	PART NUMBER	DESCRIPTION	QTY.
1	18596	ASM, FRONT RIGHT CORNER MODULE	1
2	18595	ASM, FRONT LEFT CORNER MODULE (FOR LEFT SIDE OF VEHICLE)	1
3	2-11124	BRAKE CALIPER-RAZORBACK (99-22664)	1
4	2-11167	BRAKE PADS-RAZORBACK, TYPE 98 (33-23194)	2
5	2-11168	BRAKE MOUNT PINS-RAZORBACK (05-17221)	2
6	2-11169	BRAKE, RETAINING CLIPS-SMALL-RAZORBACK	2
7	19516	SPRING, .75" LONG X .5 OD X 0.376" ID	2

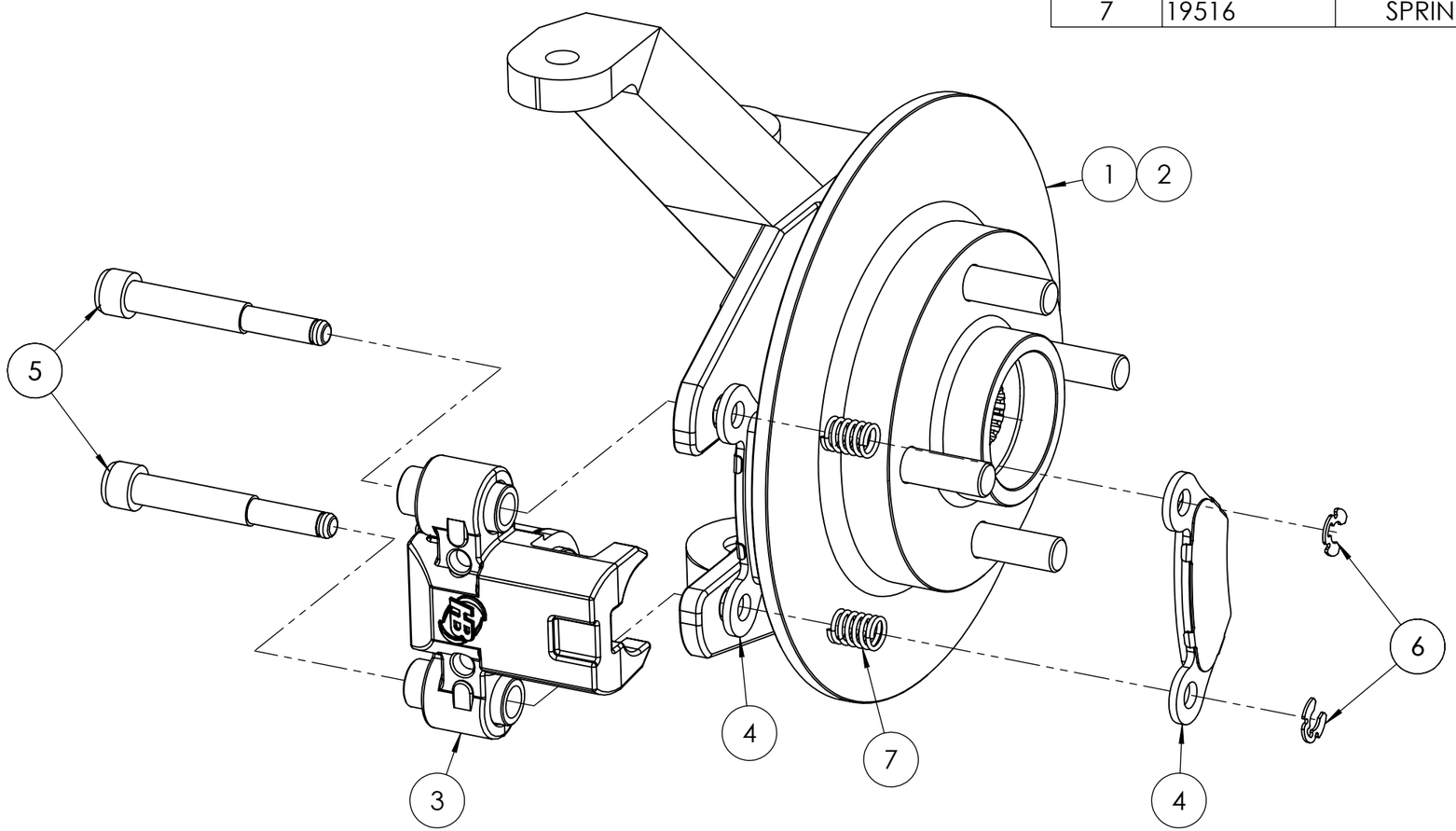

PAINT TABLE

PAINT PER ALM STD 114

PROPRIETARY AND CONFIDENTIAL

THE INFORMATION CONTAINED IN THIS DRAWING IS THE SOLE PROPERTY OF ASW, LLC. ANY REPRODUCTION IN PART OR AS A WHOLE WITHOUT THE WRITTEN PERMISSION OF ASW, LLC IS PROHIBITED.

UNLESS OTHERWISE SPECIFIED:

DIMENSIONS ARE IN INCHES
TOLERANCES:
FRACTIONAL ± 1/16"
ANGULAR: MACH ± 1°
X.X ± 0.05
X.XX ± 0.01 TORQ ± 10%
X.XXX ± 0.005 BEND ± 2°

INTERPRET GEOMETRIC TOLERANCING PER:

MATERIAL

FINISH

DO NOT SCALE DRAWING

	NAME	DATE
DRAWN		
CHECKED	XXX	
ENG APPR.		
MFG APPR.		
Q.A.		

COMMENTS:

AMERICAN LANDMASTER

FRONT HUB ASSEMBLY

SIZE	DWG. NO.	REV
B	CA00076	0

SCALE: 1:10 WEIGHT: SHEET 1 OF 1

**** PRINTED VERSIONS OF THIS DOCUMENT FOR REFERENCE ONLY ****

ITEM NO.	PART NUMBER	DESCRIPTION	QTY.
1	18202-9	WDMT, 56" UPPER A-ARM	2
2	18043	BALL JOINT, K7366	4
3	18191	BUSHING, 1" OD / .625" ID	8
4	2-42114	DOM, A-ARM SPACER	4
5	18201-9	WDMT, A-ARM 56 LOWER	2
6	19867	BOLT, 7/16-20 X 1.25 HCS GR8 YZ	12
7	19868	WASHER, 3/8 IN USS FLAT WASHER YZ	12
8	19869	NUT, 7/16-20 NYLOCK NE GR8 YZ	12

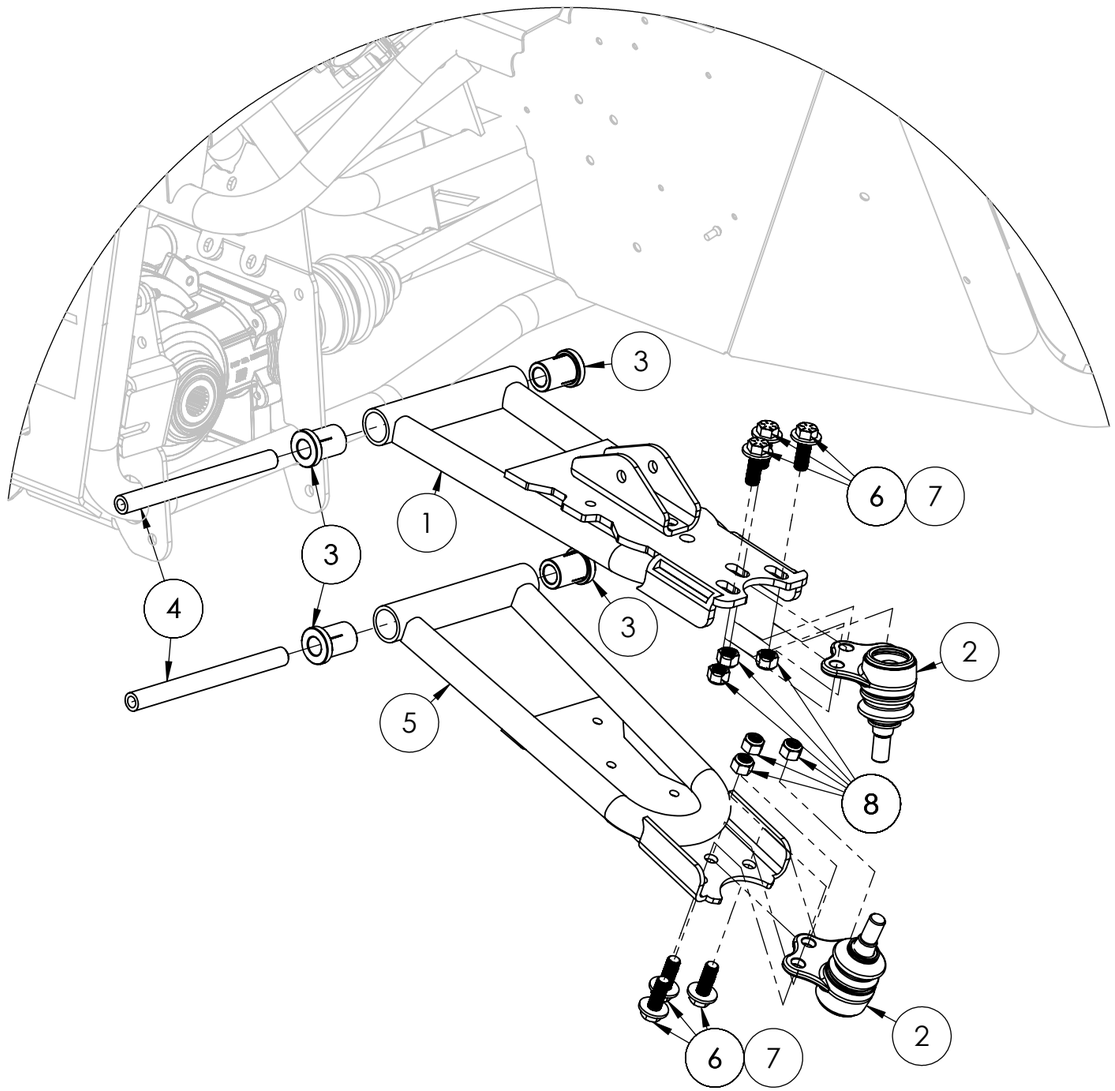

PAINT TABLE

PAINT PER ALM STD 114

PROPRIETARY AND CONFIDENTIAL

THE INFORMATION CONTAINED IN THIS DRAWING IS THE SOLE PROPERTY OF ASW, LLC. ANY REPRODUCTION IN PART OR AS A WHOLE WITHOUT THE WRITTEN PERMISSION OF ASW, LLC IS PROHIBITED.

UNLESS OTHERWISE SPECIFIED:

DIMENSIONS ARE IN INCHES
TOLERANCES:
FRACTIONAL ± 1/16"
ANGULAR: MACH ± 1°
X.X ± 0.05
X.XX ± 0.01 TORQ ±10%
X.XXX ±0.005 BEND ± 2°

INTERPRET GEOMETRIC TOLERANCING PER:

MATERIAL

FINISH

DO NOT SCALE DRAWING

	NAME	DATE
DRAWN		
CHECKED	XXX	
ENG APPR.		
MFG APPR.		
Q.A.		

◆ INDICATES CRITICAL DIMENSIONS

COMMENTS:

AMERICAN LANDMASTER

UPPER AND LOWER CONTROL ARMS ASSEMBLY

SIZE	DWG. NO.	REV
B	CA00076	0

SCALE: 1:20 WEIGHT: SHEET 1 OF 1

**** PRINTED VERSIONS OF THIS DOCUMENT FOR REFERENCE ONLY ****

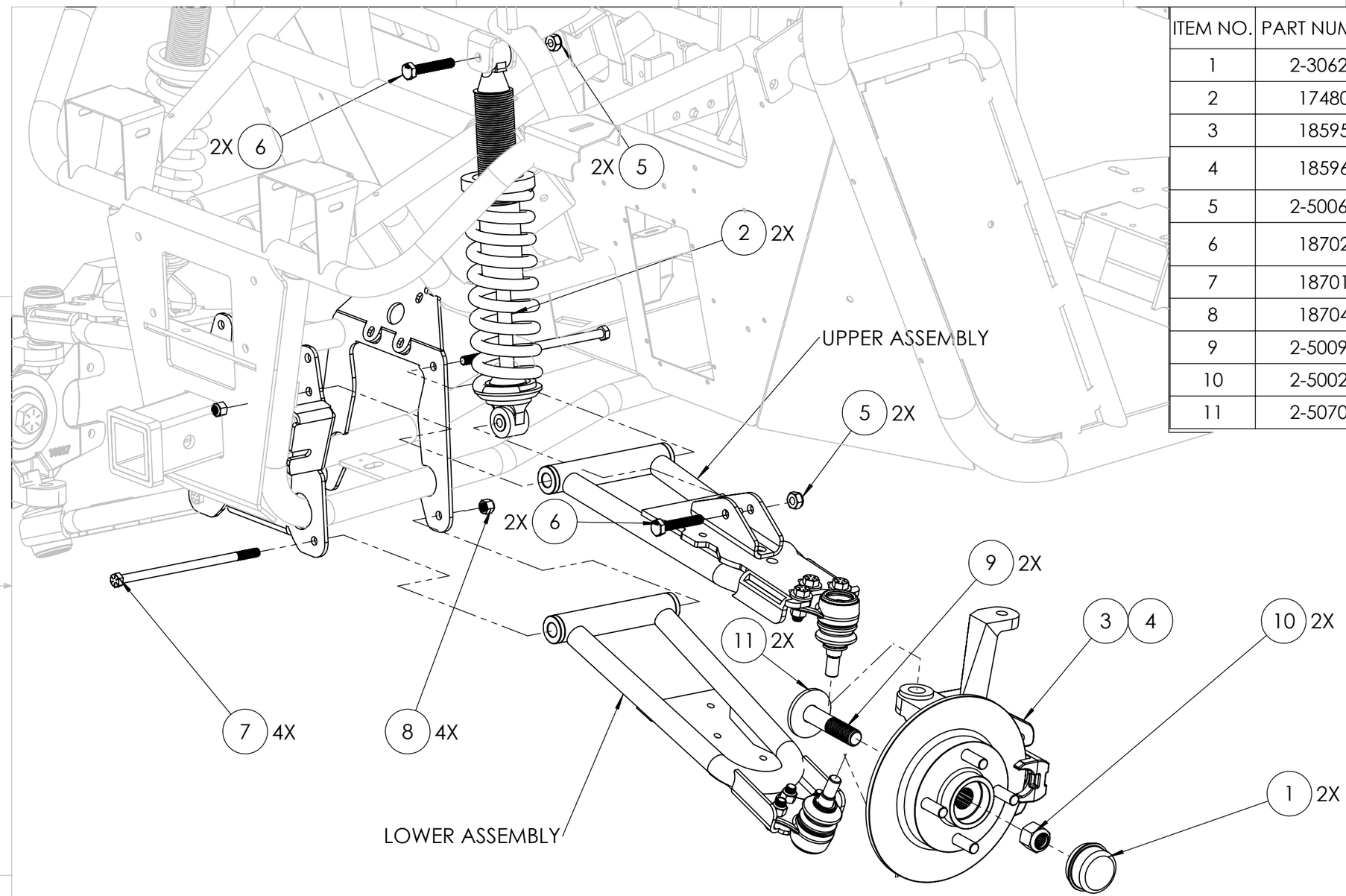

ITEM NO.	PART NUMBER	DESCRIPTION	QTY.
1	2-30623	HUB, UTV-DUST CAP	2
2	17480	SHOCK, 325	2
3	18595	ASM, FRONT LEFT CORNER MODULE	1
4	18596	ASM, FRONT RIGHT CORNER MODULE	1
5	2-50065	NUT, M10 X 1.5 NYLON LOCKING	4
6	18702	BOLT, M10X1.5 X 60MM HIGH STRENGTH	4
7	18701	BOLT, 3/8-24 X 8IN HHCS GR8	4
8	18704	NUT, 3/8-24 NYLOCK	4
9	2-50096	BOLT, 3/4 X 3-1/2 SAE G5	2
10	2-50023	NUT, 3/4IN SAE NYLOCK-JAM	2
11	2-50709	WASHER, 3/4" USS FLAT WASHER	2

PAINT TABLE

PAINT PER ALM STD 114

PROPRIETARY AND CONFIDENTIAL

THE INFORMATION CONTAINED IN THIS DRAWING IS THE SOLE PROPERTY OF ASW, LLC. ANY REPRODUCTION IN PART OR AS A WHOLE WITHOUT THE WRITTEN PERMISSION OF ASW, LLC IS PROHIBITED.

UNLESS OTHERWISE SPECIFIED:
DIMENSIONS ARE IN INCHES
TOLERANCES:
FRACTIONAL ± 1/16"
ANGULAR: MACH ± 1°
X.X ± 0.05
X.XX ± 0.01 TORQ ± 10%
X.XXX ± 0.005 BEND ± 2°

INTERPRET GEOMETRIC TOLERANCING PER:

MATERIAL

FINISH

DO NOT SCALE DRAWING

	NAME	DATE
DRAWN		
CHECKED		
ENG APPR.		
MFG APPR.		
Q.A.		

COMMENTS:

AMERICAN LANDMASTER

FRONT SUSPENSION ASSEMBLY 1

SIZE	DWG. NO.	REV
B	CA00076	0

SCALE: 1:5 WEIGHT: SHEET 1 OF 1

**** PRINTED VERSIONS OF THIS DOCUMENT FOR REFERENCE ONLY ****

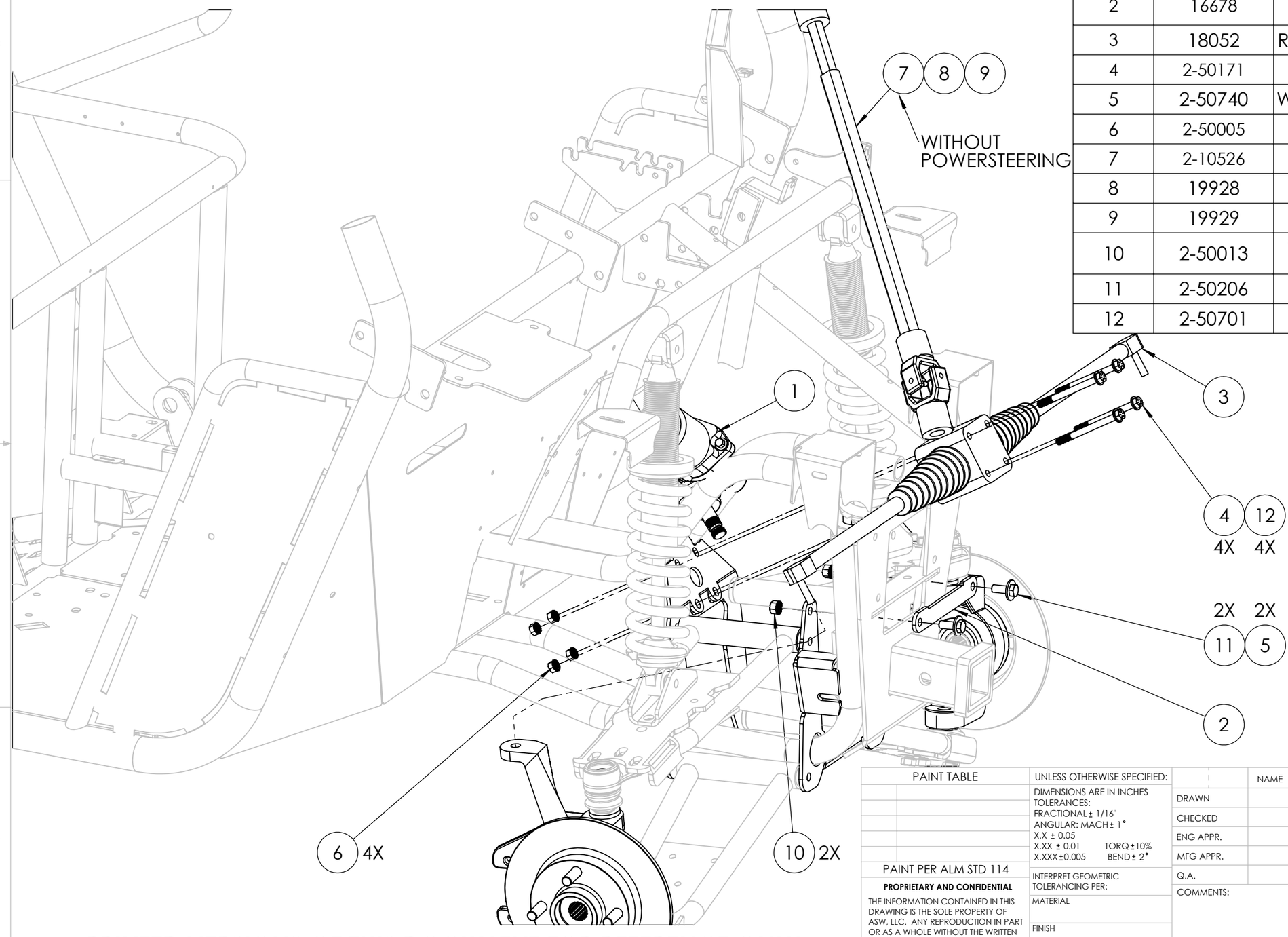

ITEM NO.	PART NUMBER	DESCRIPTION	QTY.
1	19059	KIT, POWER STEERING, W/ CONNECTORS	1
2	16678	FRONT A-ARM TIE BAR 4-LINK - BLACK	1
3	18052	RACK & PINION, IRS 56-PARP-350	1
4	2-50171	BOLT, 5/16IN-18 X 3-3/4IN HH G5	4
5	2-50740	WASHER, 3/8IN USS FLAT WASHER	2
6	2-50005	NUT, 5/16-18 KEPS	4
7	2-10526	SHAFT, STEERING - UNIVERSAL	1
8	19928	SHAFT, STEERING UPPER EPS	1
9	19929	SHAFT, STEERING LOWER EPS	1
10	2-50013	90675A031_ZINC-PLATED STEEL HEX NUT WITH TOOTH WASHER	2
11	2-50206	BOLT, 3/8-16 X 1 HEX HEAD G5	2
12	2-50701	WASHER, 5/16 SAE FLAT	4

PAINT TABLE

PAINT PER ALM STD 114

PROPRIETARY AND CONFIDENTIAL

THE INFORMATION CONTAINED IN THIS DRAWING IS THE SOLE PROPERTY OF ASW, LLC. ANY REPRODUCTION IN PART OR AS A WHOLE WITHOUT THE WRITTEN PERMISSION OF ASW, LLC IS PROHIBITED.

UNLESS OTHERWISE SPECIFIED:

DIMENSIONS ARE IN INCHES
TOLERANCES:
FRACTIONAL ± 1/16"
ANGULAR: MACH ± 1°
X.X ± 0.05
X.XX ± 0.01 TORQ ±10%
X.XXX ±0.005 BEND ± 2°

INTERPRET GEOMETRIC TOLERANCING PER:

MATERIAL

FINISH

DO NOT SCALE DRAWING

	NAME	DATE
DRAWN		
CHECKED		
ENG APPR.		
MFG APPR.		
Q.A.		

COMMENTS:

AMERICAN LANDMASTER

FRONT SUSPENSION ASSEMBLY 2

SIZE	DWG. NO.	REV
B	CA00076	0

SCALE: 1:5 WEIGHT: SHEET 1 OF 1

**** PRINTED VERSIONS OF THIS DOCUMENT FOR REFERENCE ONLY ****

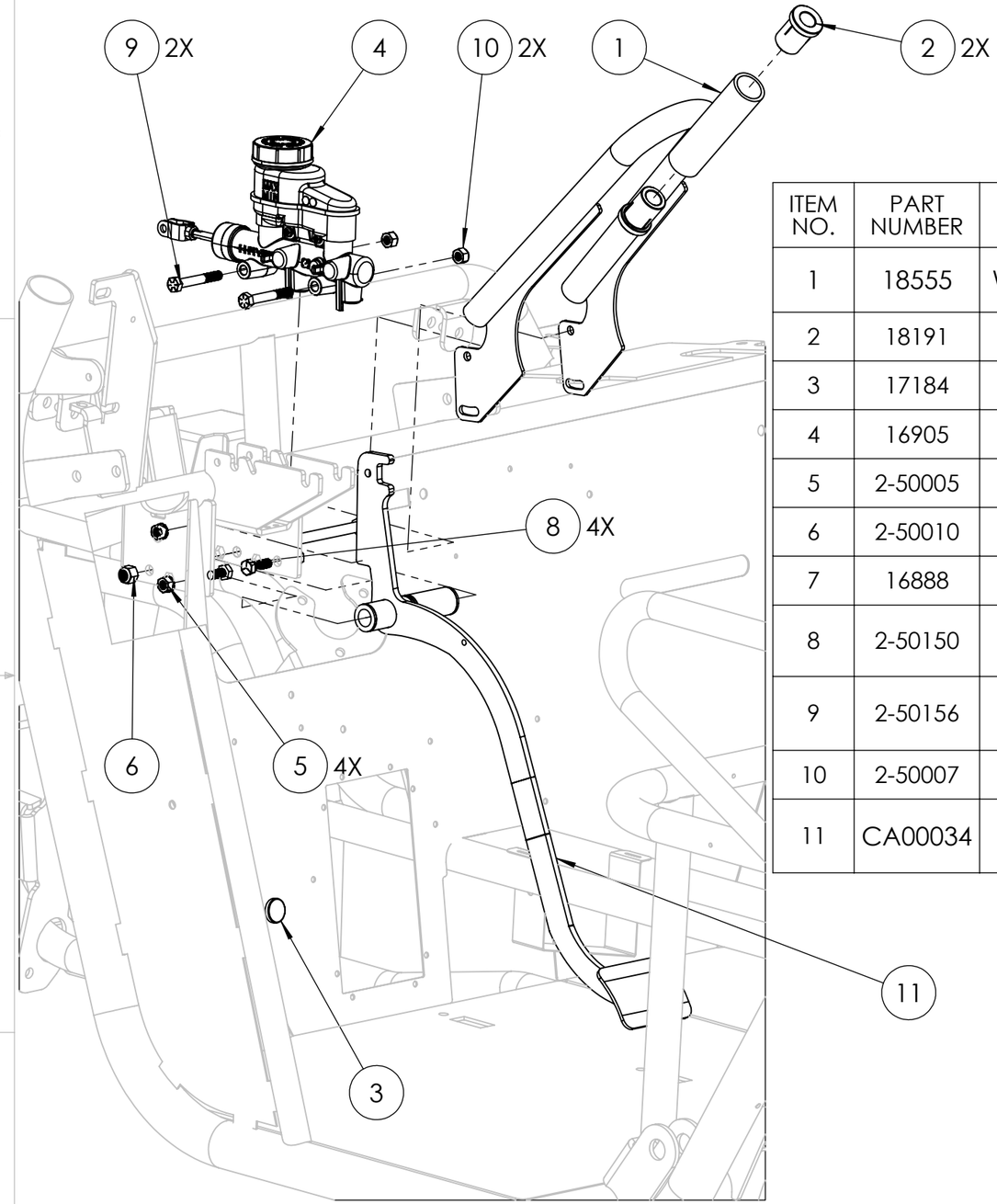

ITEM NO.	PART NUMBER	DESCRIPTION	QTY.
1	18555	WDMT, STEERING SUPPORT	1
2	18191	BUSHING, 1" OD / .625" ID	2
3	17184	RUBBER, 2018 PEDAL STOP	1
4	16905	MASTER CYLINDER, 4WD	1
5	2-50005	NUT, 5/16-18 KEPS	4
6	2-50010	NUT, 3/8-16 NYLOCK	1
7	16888	BOLT, 3/8" x 5.5"	1
8	2-50150	BOLT, 5/16-18 X 1 HEX HEAD G5	4
9	2-50156	BOLT, 5/16IN X 2-1/4IN HEX HEAD G5	2
10	2-50007	NUT, 5/16-18 NYLOCK	2
11	CA00034	ASM, PEDAL CLUSTER EV-2023	1

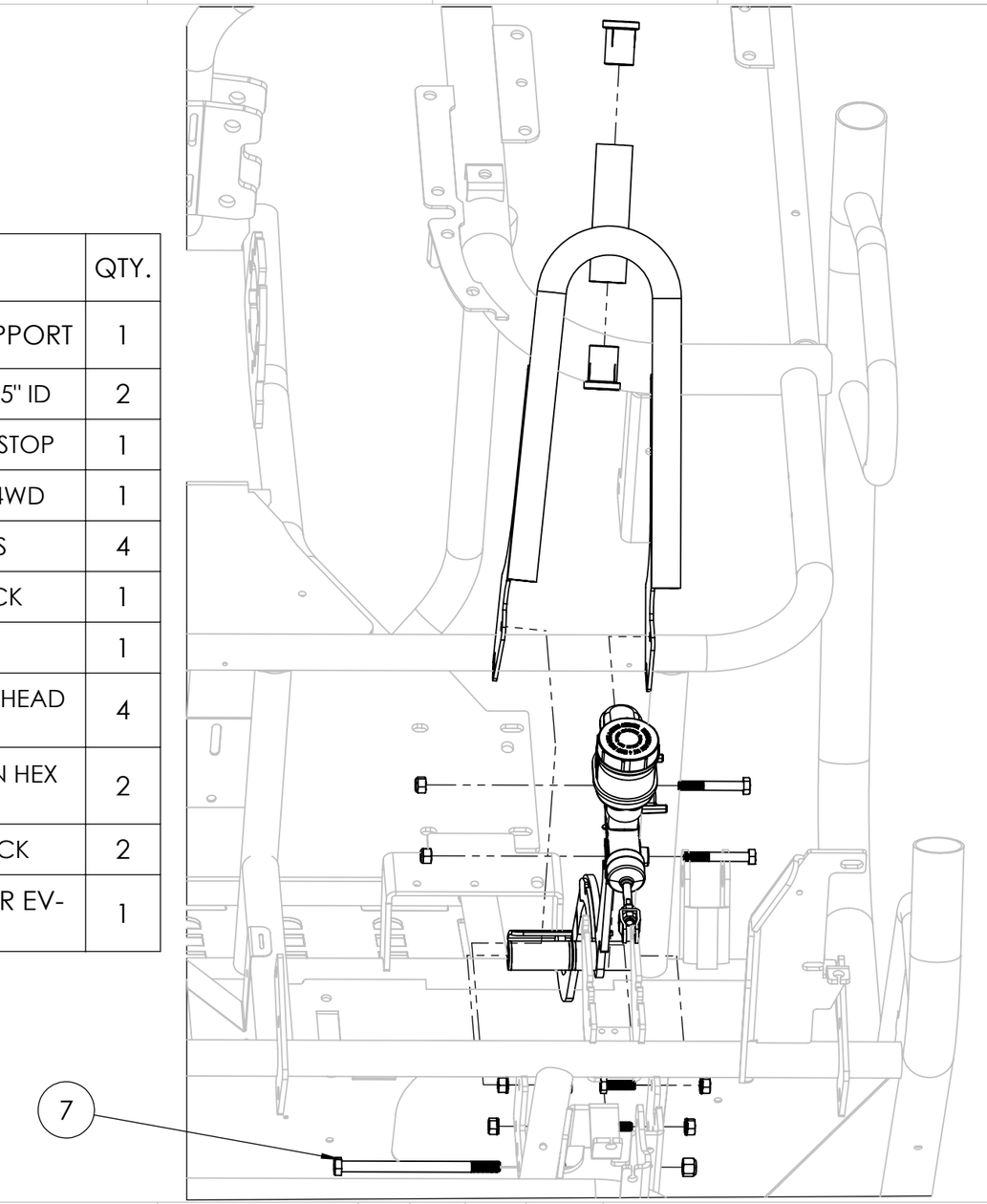

PAINT TABLE

PAINT PER ALM STD 114

PROPRIETARY AND CONFIDENTIAL

THE INFORMATION CONTAINED IN THIS DRAWING IS THE SOLE PROPERTY OF ASW, LLC. ANY REPRODUCTION IN PART OR AS A WHOLE WITHOUT THE WRITTEN PERMISSION OF ASW, LLC IS PROHIBITED.

UNLESS OTHERWISE SPECIFIED:

DIMENSIONS ARE IN INCHES
TOLERANCES:
FRACTIONAL ± 1/16"
ANGULAR: MACH ± 1°
X.X ± 0.05
X.XX ± 0.01 TORQ ± 10%
X.XXX ± 0.005 BEND ± 2°

INTERPRET GEOMETRIC TOLERANCING PER:

MATERIAL

FINISH

DO NOT SCALE DRAWING

	NAME	DATE
DRAWN		
CHECKED		
ENG APPR.		
MFG APPR.		
Q.A.		

COMMENTS:

AMERICAN LANDMASTER

STEERING SUPPORT AND PEDAL ASSEMBLY

SIZE	DWG. NO.	REV
B	CA00076	0

SCALE: 1:5 WEIGHT: SHEET 1 OF 1

**** PRINTED VERSIONS OF THIS DOCUMENT FOR REFERENCE ONLY ****

ITEM NO.	PART NUMBER	DESCRIPTION	QTY.
1	15823	NUT, CLIP ON TAPPED - M6 X 1.0; 11 GA MA	5
2	14426	BOLT, M6 X 1.0 X 14	2
3	18134	SCREW, M6 X 1 X 20 WIDE FLG BUTT HD SS	3
4	2-50099	NUT, M8 x 1.25 WHIZ FLANGE	2
5	19190	PEDAL, ACCELERATOR, SUS ELEC PEDAL	1
6	19404	BRKT, EV PEDAL COVER	1
7	19405	BRKT, EV PEDAL COVER SEAM	1
8	CP00231	BRKT, AMP/L4 THROTTLE LEVER	1
9	16367	RIVET, 3/16" X .575"-AL-BLK	8

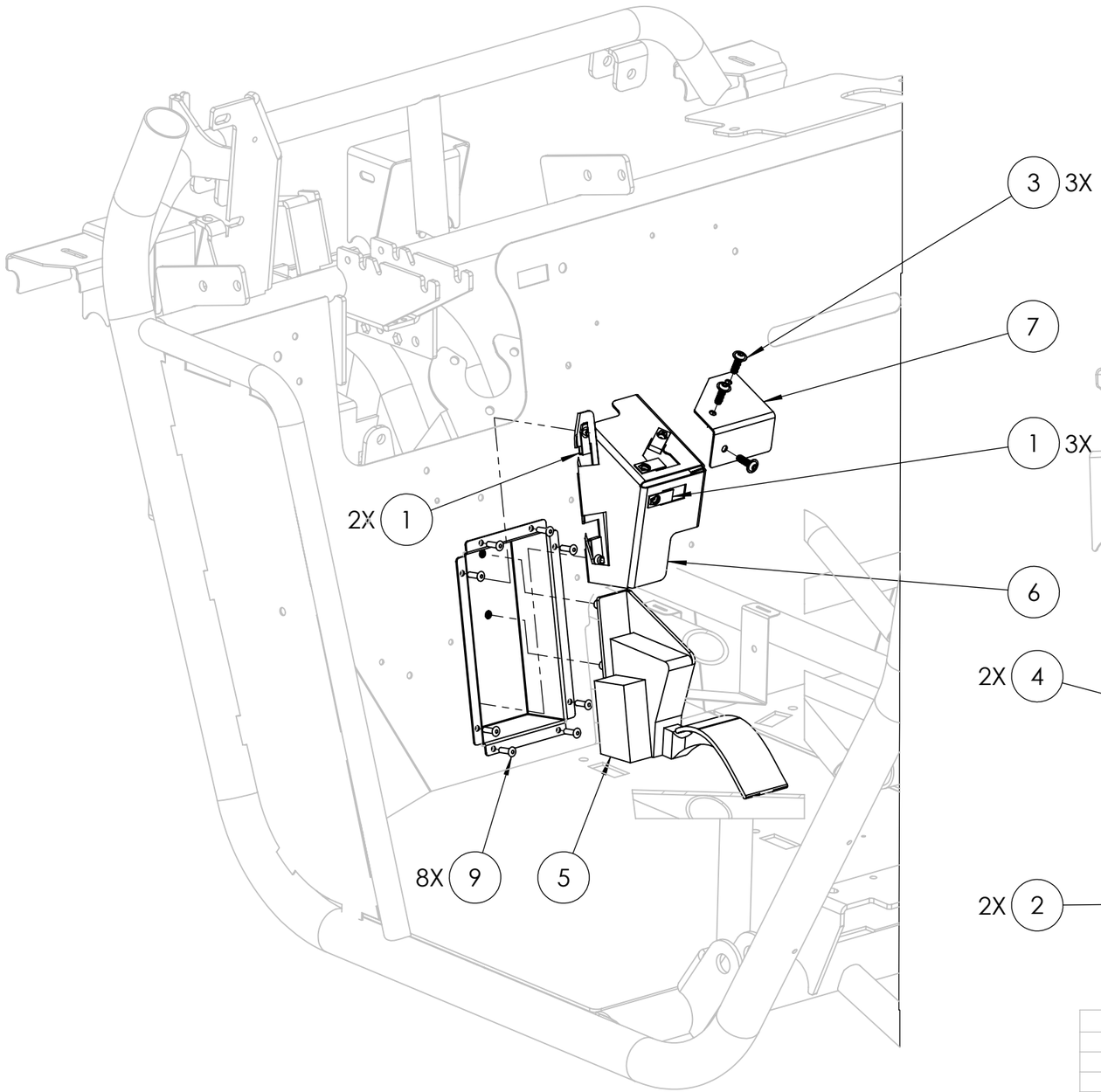

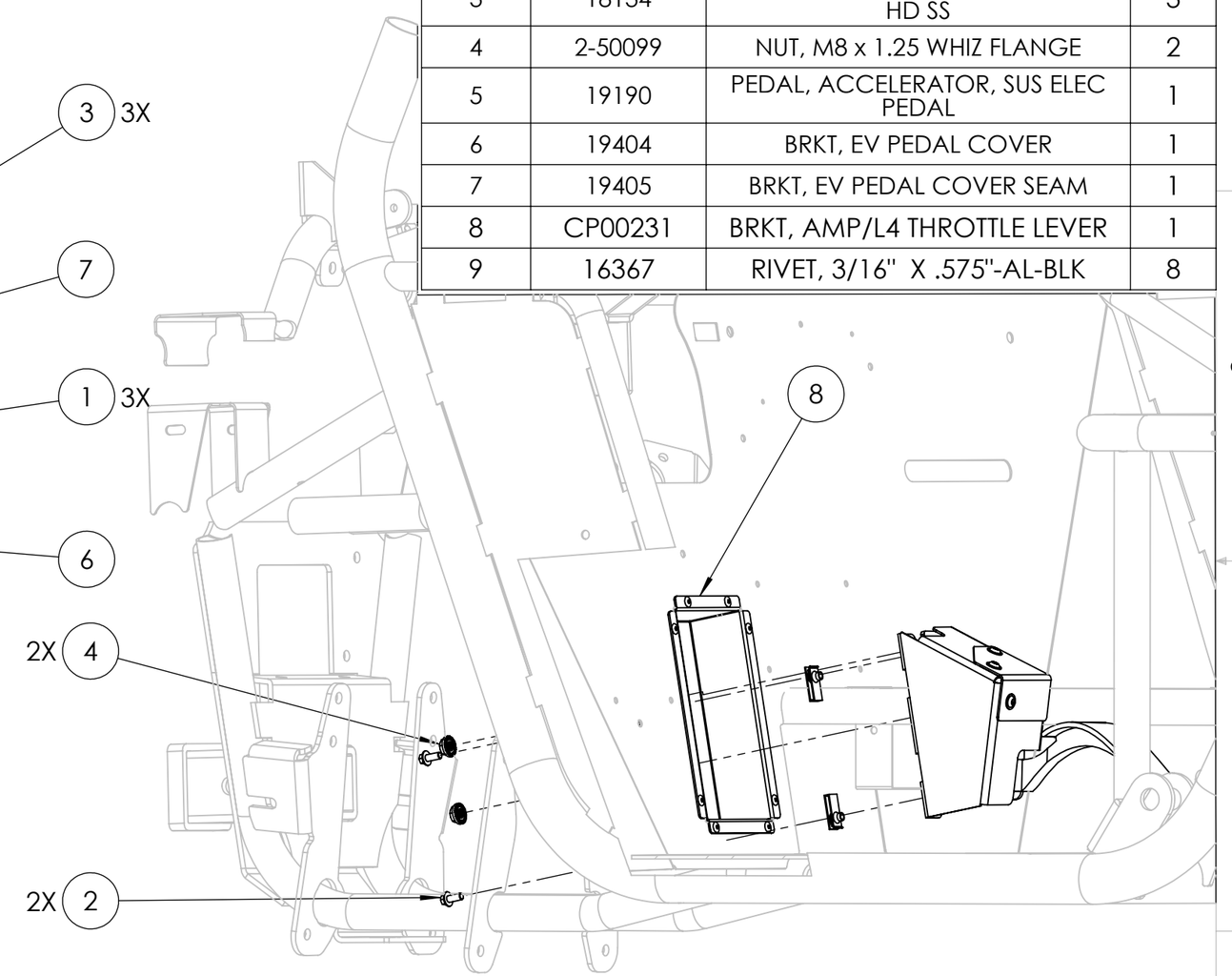

PAINT TABLE

PAINT PER ALM STD 114

PROPRIETARY AND CONFIDENTIAL

THE INFORMATION CONTAINED IN THIS DRAWING IS THE SOLE PROPERTY OF ASW, LLC. ANY REPRODUCTION IN PART OR AS A WHOLE WITHOUT THE WRITTEN PERMISSION OF ASW, LLC IS PROHIBITED.

UNLESS OTHERWISE SPECIFIED:
DIMENSIONS ARE IN INCHES
TOLERANCES:
FRACTIONAL ± 1/16"
ANGULAR: MACH ± 1°
X.X ± 0.05
X.XX ± 0.01 TORQ ± 10%
X.XXX ± 0.005 BEND ± 2°

INTERPRET GEOMETRIC TOLERANCING PER:

MATERIAL

FINISH

DO NOT SCALE DRAWING

	NAME	DATE
DRAWN		
CHECKED		
ENG APPR.		
MFG APPR.		
Q.A.		

COMMENTS:

AMERICAN LANDMASTER

THROTTLE PEDAL ASSEMBLY

SIZE	DWG. NO.	REV
B	CA00076	0

SCALE: 1:5 WEIGHT: SHEET 1 OF 1

**** PRINTED VERSIONS OF THIS DOCUMENT FOR REFERENCE ONLY ****

ITEM NO.	PART NUMBER	DESCRIPTION	QTY.
1	15823	NUT, CLIP ON TAPPED - M6 X 1.0; 11 GA MA	5
2	14426	BOLT, M6 X 1.0 X 14	5
3	19355	BRKT, UPPER PEDAL GUARD	1
4	19356	BRKT, LOWER PEDAL GUARD	1

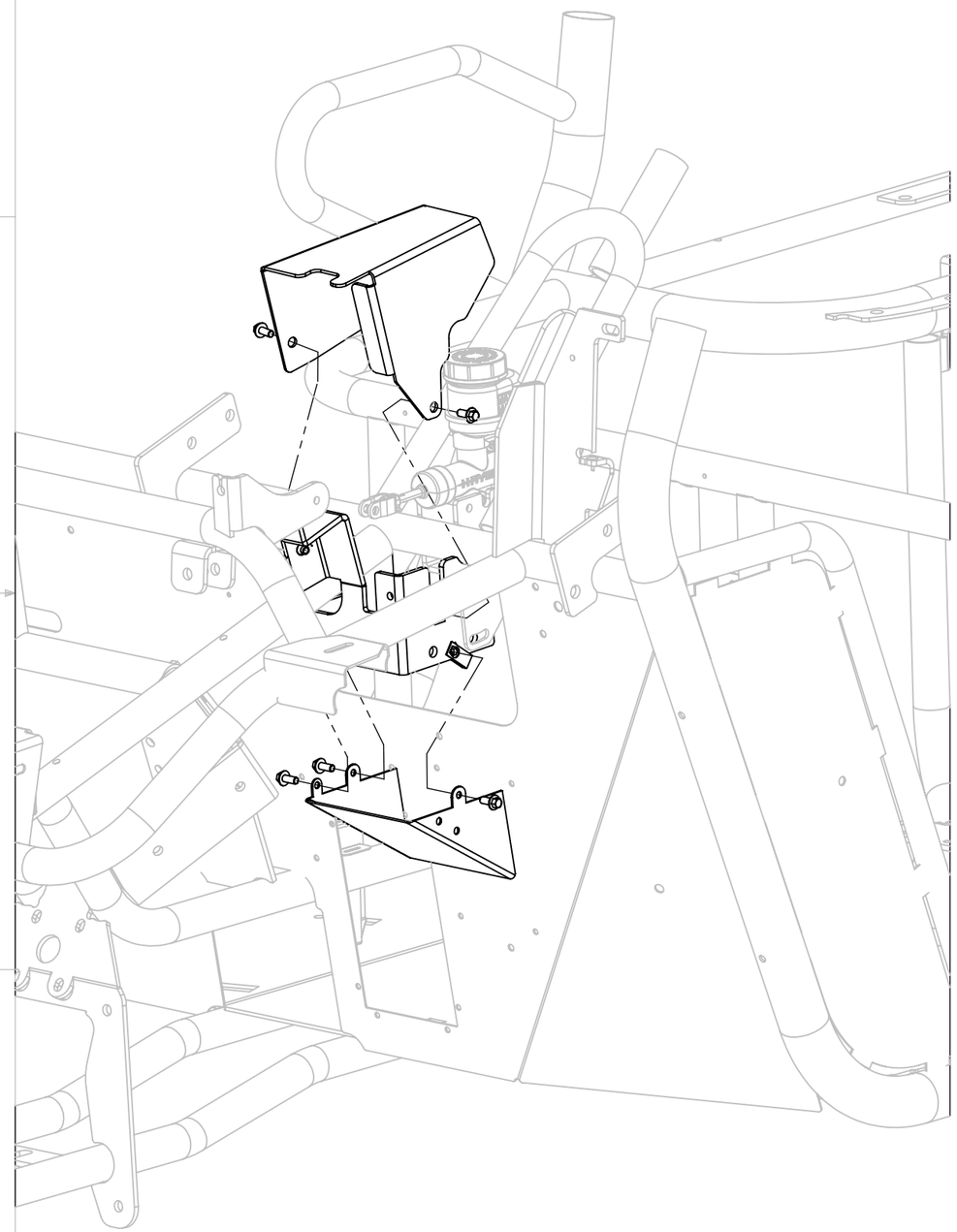

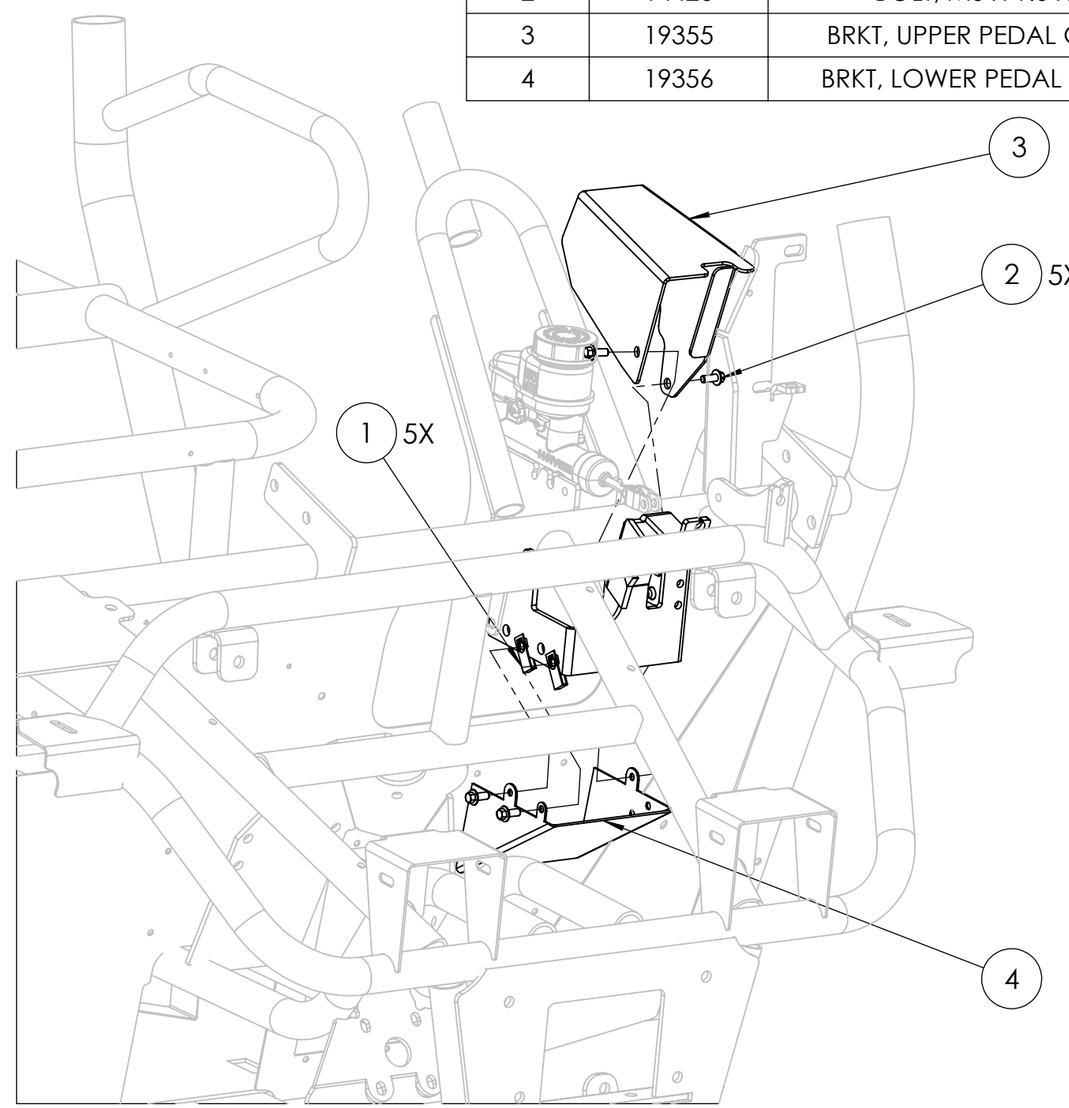

PAINT TABLE

PAINT PER ALM STD 114

PROPRIETARY AND CONFIDENTIAL

THE INFORMATION CONTAINED IN THIS DRAWING IS THE SOLE PROPERTY OF ASW, LLC. ANY REPRODUCTION IN PART OR AS A WHOLE WITHOUT THE WRITTEN PERMISSION OF ASW, LLC IS PROHIBITED.

UNLESS OTHERWISE SPECIFIED:

DIMENSIONS ARE IN INCHES
TOLERANCES:
FRACTIONAL ± 1/16"
ANGULAR: MACH ± 1°
X.X ± 0.05
X.XX ± 0.01 TORQ ±10%
X.XXX ±0.005 BEND ± 2°

INTERPRET GEOMETRIC TOLERANCING PER:

MATERIAL

FINISH

DO NOT SCALE DRAWING

	NAME	DATE
DRAWN		
CHECKED		
ENG APPR.		
MFG APPR.		
Q.A.		

COMMENTS:

AMERICAN LANDMASTER

PEDAL GAURD ASSEMBLY

SIZE	DWG. NO.	REV
B	CA00076	0

SCALE: 1:5 WEIGHT: SHEET 1 OF 1

**** PRINTED VERSIONS OF THIS DOCUMENT FOR REFERENCE ONLY ****

ITEM NO.	PART NUMBER	DESCRIPTION	QTY.
1	16902	BRAKE LINE, FRONT HANGING BRK	1
2	18378	BRAKE LINE, REAR STD	1

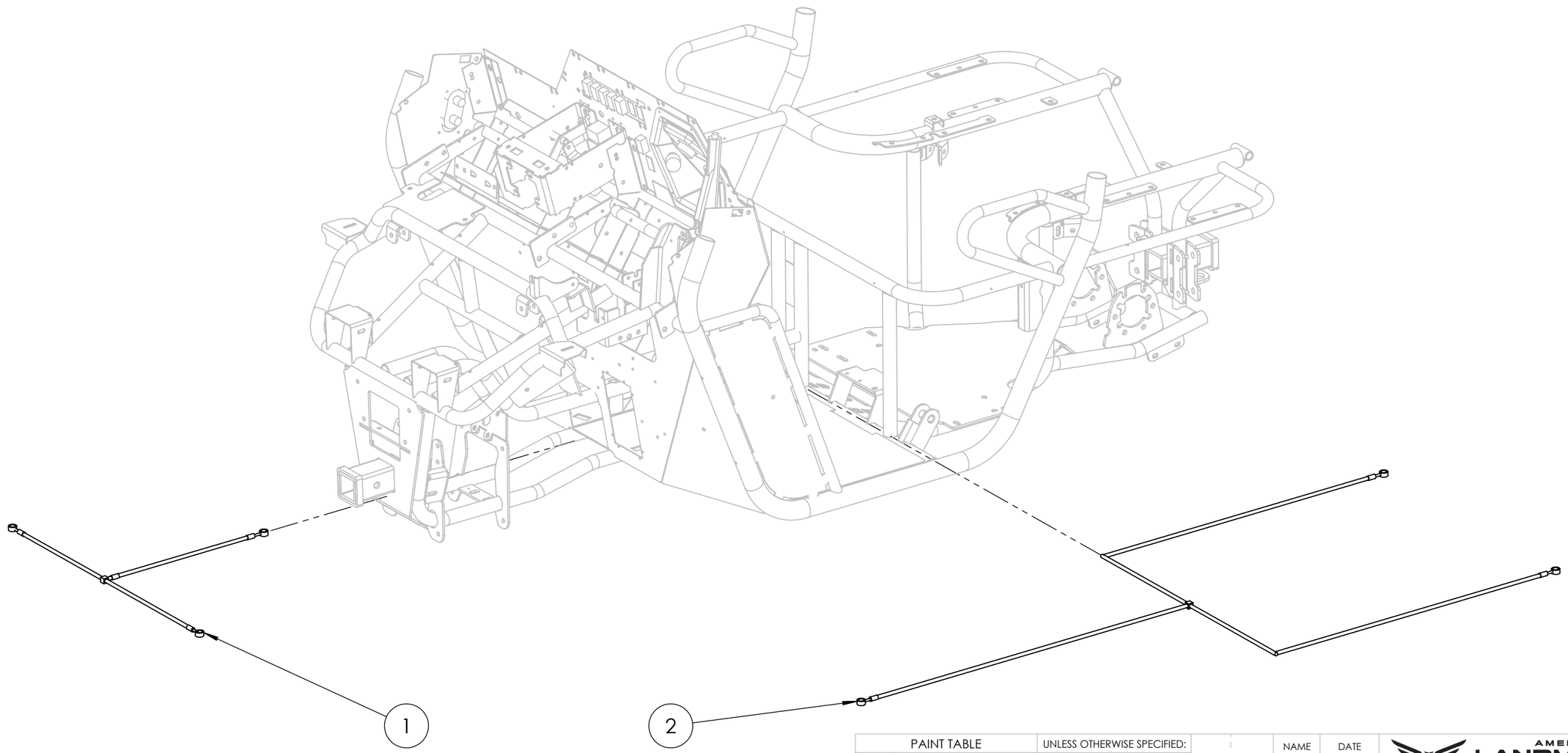

**** PRINTED VERSIONS OF THIS DOCUMENT FOR REFERENCE ONLY ****

PAINT TABLE
PAINT PER ALM STD 114

PROPRIETARY AND CONFIDENTIAL

THE INFORMATION CONTAINED IN THIS DRAWING IS THE SOLE PROPERTY OF ASW, LLC. ANY REPRODUCTION IN PART OR AS A WHOLE WITHOUT THE WRITTEN PERMISSION OF ASW, LLC IS PROHIBITED.

UNLESS OTHERWISE SPECIFIED:

DIMENSIONS ARE IN INCHES
TOLERANCES:
FRACTIONAL ± 1/16"
ANGULAR: MACH ± 1°
X.X ± 0.05
X.XX ± 0.01 TORQ ±10%
X.XXX ±0.005 BEND ± 2°

INTERPRET GEOMETRIC TOLERANCING PER:

MATERIAL

FINISH

DO NOT SCALE DRAWING

	NAME	DATE
DRAWN		
CHECKED		
ENG APPR.		
MFG APPR.		
Q.A.		

COMMENTS:

AMERICAN LANDMASTER

BRAKE LINE ASSEMBLY

SIZE	DWG. NO.	REV
B	CA00076	0
SCALE: 1:10	WEIGHT:	SHEET 1 OF 1

ITEM NO.	PART NUMBER	DESCRIPTION	QTY.
1	2-11137	BRAKE LINE-BANJO BOLT (M10X1.0)	2
2	2-11138	BRAKE LINE-CRUSH WASHER (M10 SIZE)	4

INCLUDES RIGHT AND LEFT

SAME HARDWARE FOR REAR

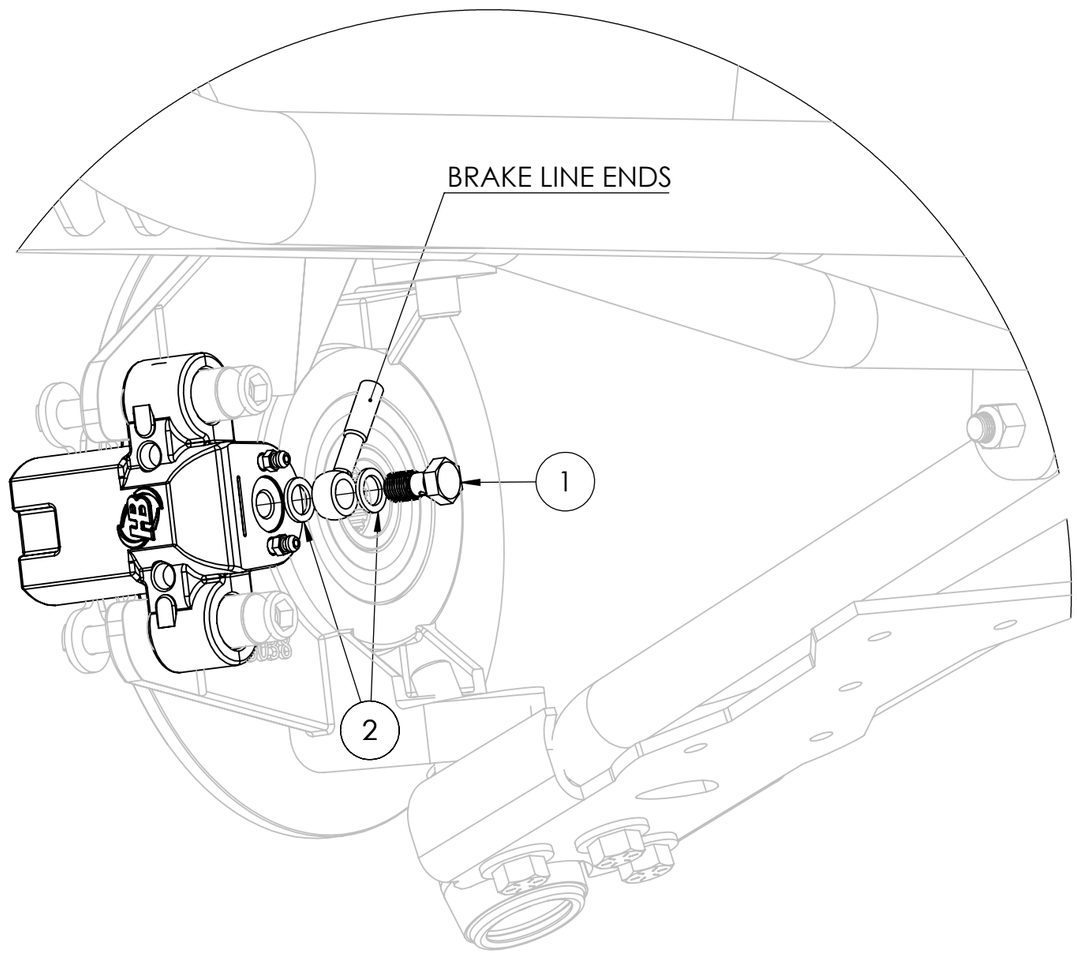

**** PRINTED VERSIONS OF THIS DOCUMENT FOR REFERENCE ONLY ****

PAINT TABLE	

PAINT PER ALM STD 114

PROPRIETARY AND CONFIDENTIAL

THE INFORMATION CONTAINED IN THIS DRAWING IS THE SOLE PROPERTY OF ASW, LLC. ANY REPRODUCTION IN PART OR AS A WHOLE WITHOUT THE WRITTEN PERMISSION OF ASW, LLC IS PROHIBITED.

UNLESS OTHERWISE SPECIFIED:

DIMENSIONS ARE IN INCHES
TOLERANCES:
FRACTIONAL ± 1/16"
ANGULAR: MACH ± 1°
X.X ± 0.05
X.XX ± 0.01 TORQ ±10%
X.XXX ±0.005 BEND ± 2°

INTERPRET GEOMETRIC TOLERANCING PER:

MATERIAL

FINISH

DO NOT SCALE DRAWING

	NAME	DATE
DRAWN		
CHECKED	XXX	
ENG APPR.		
MFG APPR.		
Q.A.		

COMMENTS:

AMERICAN LANDMASTER

BRAKE LINE TO ROTOR ASSEMBLY

SIZE	DWG. NO.	REV
B	CA00076	0

SCALE: 1:20 WEIGHT: SHEET 1 OF 1

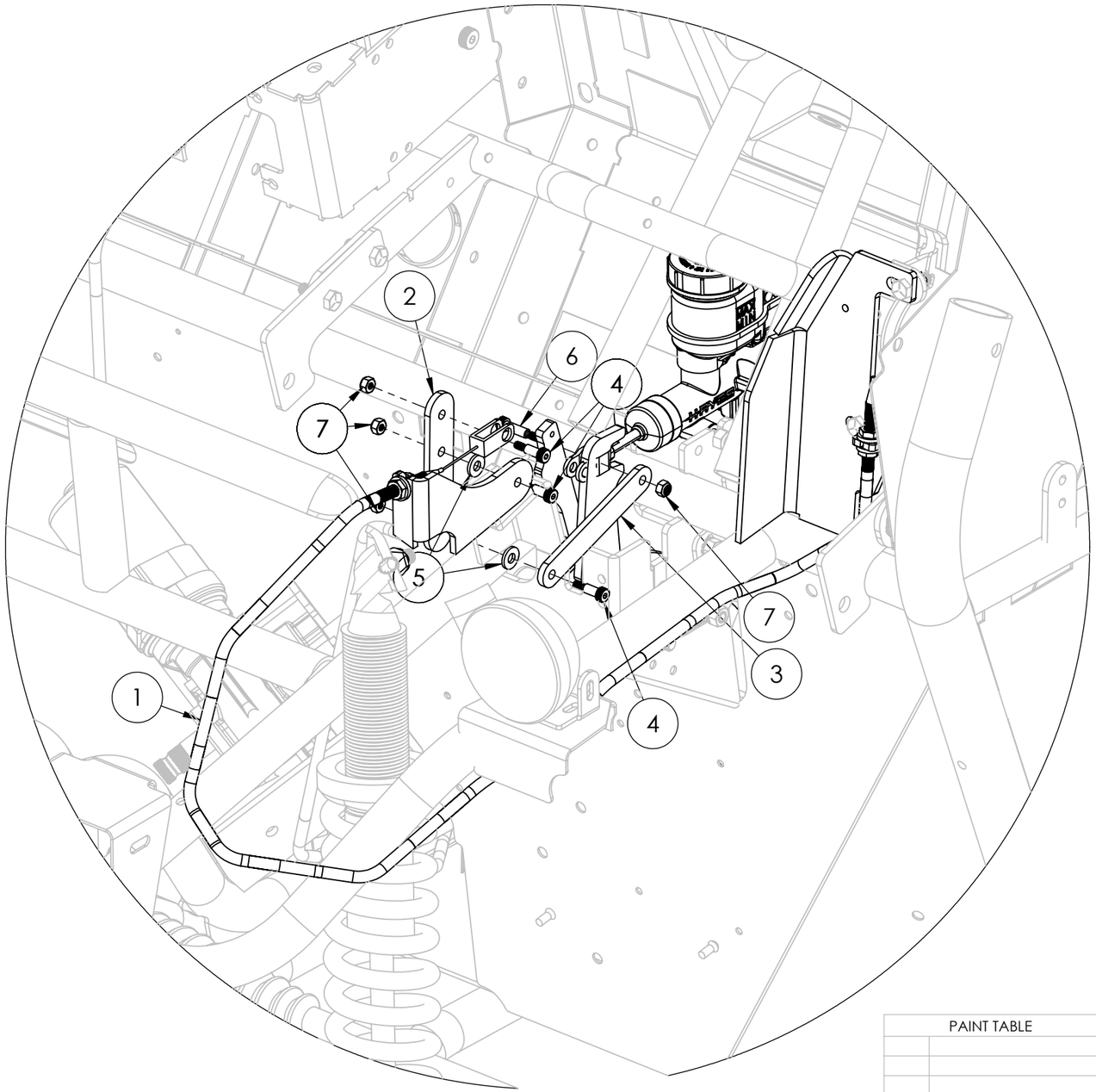

ITEM NO.	PART NUMBER	DESCRIPTION	QTY.
1	19562	CABLE, PARKING UTV	1
2	19568	BRKT, PARK LINK	1
3	19569	BRKT, PARK LINK	1
4	19563	BOLT, 1/4" DIA 1/2" SHOULDER 10-24	3
5	2-50717	WASHER, 1/4IN SAE FLAT	2
6	19564	BOLT, 1/4" DIA 3/4" SHOULDER 10-24	1
7	19072	NUT, #10-24 NYLOCK 18-8SS	4

**** PRINTED VERSIONS OF THIS DOCUMENT FOR REFERENCE ONLY ****

PAINT TABLE

PAINT PER ALM STD 114

PROPRIETARY AND CONFIDENTIAL

THE INFORMATION CONTAINED IN THIS DRAWING IS THE SOLE PROPERTY OF ASW, LLC. ANY REPRODUCTION IN PART OR AS A WHOLE WITHOUT THE WRITTEN PERMISSION OF ASW, LLC IS PROHIBITED.

UNLESS OTHERWISE SPECIFIED:
DIMENSIONS ARE IN INCHES
TOLERANCES:
FRACTIONAL ± 1/16"
ANGULAR: MACH ± 1°
X.X ± 0.05
X.XX ± 0.01 TORQ ±10%
X.XXX ±0.005 BEND ± 2°

INTERPRET GEOMETRIC TOLERANCING PER:

MATERIAL

FINISH

DO NOT SCALE DRAWING

	NAME	DATE
DRAWN		
CHECKED	XXX	
ENG APPR.		
MFG APPR.		
Q.A.		

◆ INDICATES CRITICAL DIMENSIONS

COMMENTS:

AMERICAN LANDMASTER

PARKING BRAKE ASSEMBLY

SIZE	DWG. NO.	REV
B	CA00076	0

SCALE: 1:50 WEIGHT: SHEET 1 OF 1

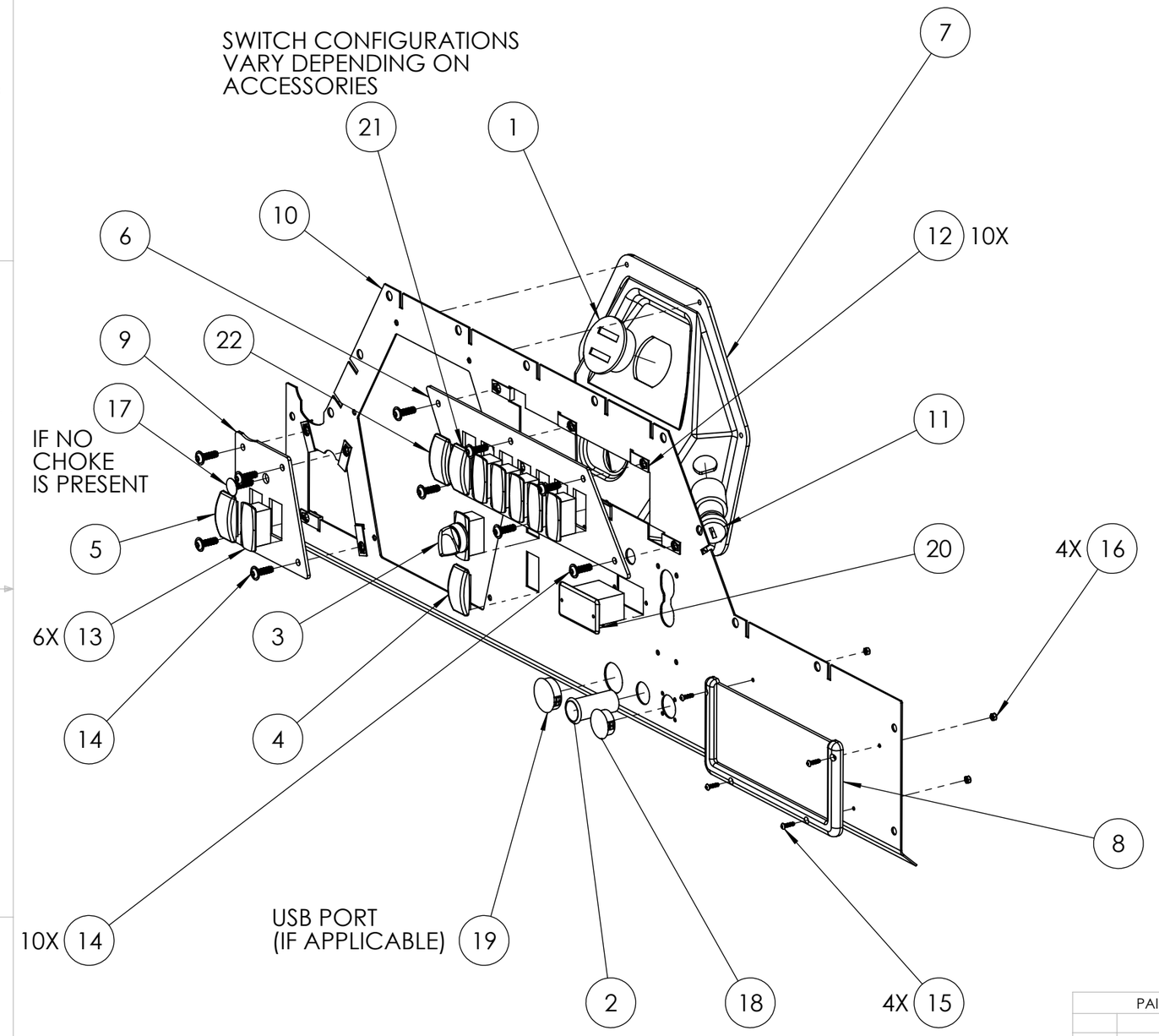

ITEM NO.	PART NUMBER	DESCRIPTION	QTY.
1	19909	GAUGE, 12V BATT VOLT/HOUR COMBO RND	1
2	2-70080	OUTLET, ACCESSORY-12V DC POWER	1
3	18504	SWITCH, ROTARY, GEAR POSITION	1
4	18381	LIGHT, WARNING PARK/SEATBELT	1
5	18383	SWITCH, FLOOD/HEADLIGHT	1
6	18351	BRKT, 7 SWITCH PANEL	1
7	18075	DASH, STEERING COLUMN - ABS BLK	1
8	18356	NET, 4X9	1
9	18352	BRKT, LOWER DASH PANEL	1
10	19821	BRKT, DASH FACE EV 4X4	1
11	18484	SWITCH, IGNITION	1
12	15823	NUT, CLIP ON TAPPED - M6 X 1.0; 11 GA MA	10
13	18506	ROCKER SWITCH HOLE PLUG	6
14	18134	SCREW, M6 X 1 X 20 WIDE FLG BUTT HD SS	10
15	18699	BOLT, #5-40 - 1/2 LONG	4
16	18698	NUT, #5-40 NYLOCK	4
17	2-50817	PIN, PUSH-IN - PLASTIC	1
18	19117	PLUG, PLASTIC ROUND	1
19	19239	PLUG, LOCKING PANEL PLUG 1-3/16IN THICK,BLK	1
20	19181	Meter, 48 Volt Battery, Roypow	1
21	18502	SWITCH, ROCKER, 2WD/4WD	1
22	CP00176	SWITCH, AMP, ROCKER, HIGH/LO	1

PAINT TABLE

PAINT PER ALM STD 114

PROPRIETARY AND CONFIDENTIAL

THE INFORMATION CONTAINED IN THIS DRAWING IS THE SOLE PROPERTY OF ASW, LLC. ANY REPRODUCTION IN PART OR AS A WHOLE WITHOUT THE WRITTEN PERMISSION OF ASW, LLC IS PROHIBITED.

UNLESS OTHERWISE SPECIFIED:

DIMENSIONS ARE IN INCHES
TOLERANCES:
FRACTIONAL ± 1/16"
ANGULAR: MACH ± 1°
X.X ± 0.05
X.XX ± 0.01 TORQ ±10%
X.XXX ±0.005 BEND ± 2°

INTERPRET GEOMETRIC TOLERANCING PER:

MATERIAL

FINISH

DO NOT SCALE DRAWING

	NAME	DATE
DRAWN		
CHECKED		
ENG APPR.		
MFG APPR.		
Q.A.		

COMMENTS:

AMERICAN LANDMASTER

DASH FACE ASSEMBLY

SIZE	DWG. NO.	REV
B	CA00076	0

SCALE: 1:5 WEIGHT: SHEET 1 OF 1

**** PRINTED VERSIONS OF THIS DOCUMENT FOR REFERENCE ONLY ****

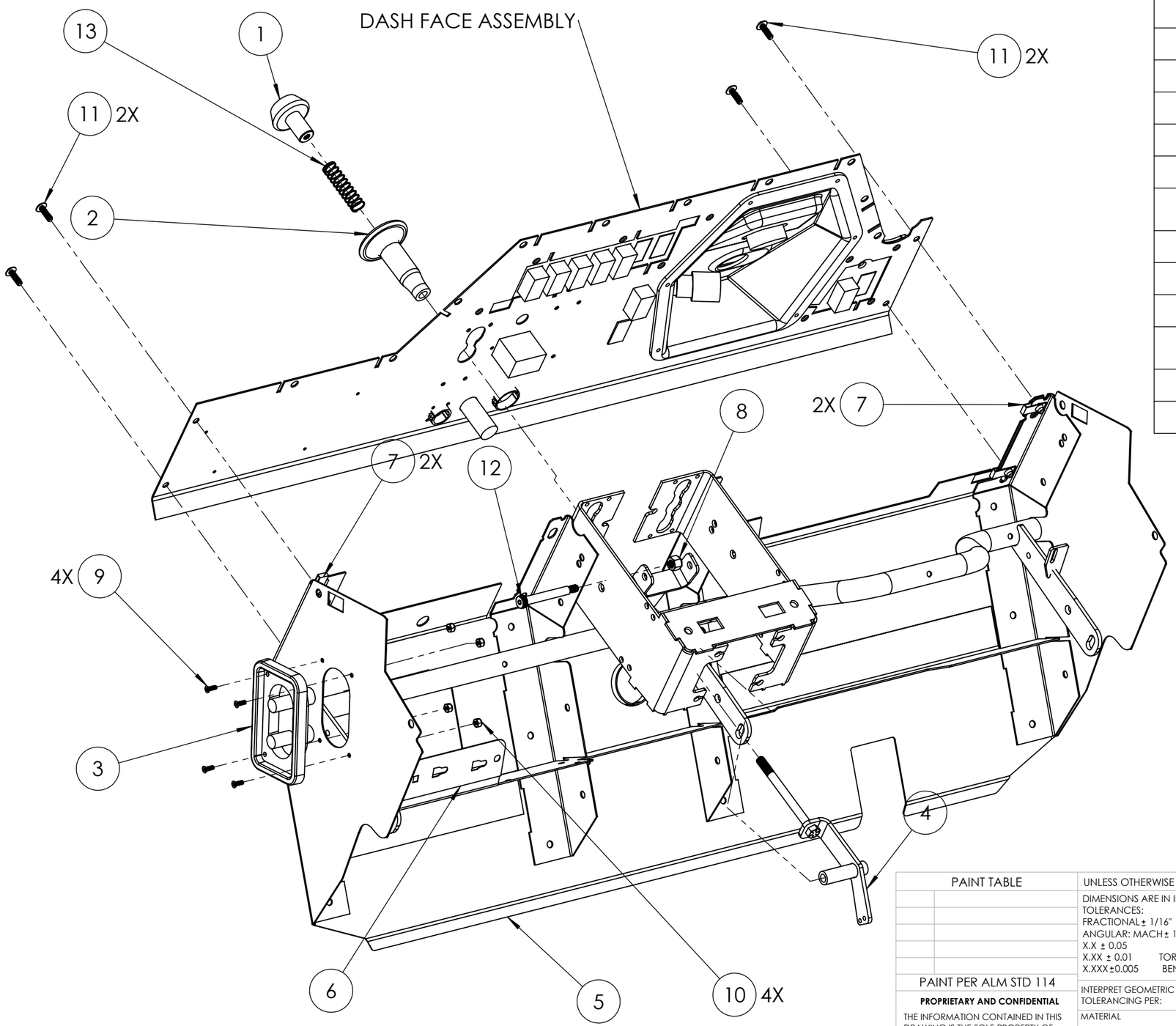

ITEM NO.	PART NUMBER	DESCRIPTION	QTY.
1	18095	KNOB, SHIFTER	1
2	18096	SHIFTER, LIFTER	1
3	18357	BATTERY, EZ CHARGE REMOTE STUDS	1
4	18114-1	WDMT, DIFF SHIFTER	1
5	18354-1	WDMT, LOWER DASH STRUCTURE	1
6	18347	BRKT, PDM MOUNT	1
7	15823	NUT, CLIP ON TAPPED - M6 X 1.0; 11 GA MA	4
8	2-50010	NUT, 3/8-16 NYLOCK	1
9	18695	#8-32 1/2" TAPER FHS	4
10	18694	#8-32 NYLOCK NUT	4
11	18134	SCREW, M6 X 1 X 20 WIDE FLG BUTT HD SS	4
12	18360	BOLT, SHOULDER 2.5" X 3/8"	1
13	18113	SPRING, SHIFTER	1

**** PRINTED VERSIONS OF THIS DOCUMENT FOR REFERENCE ONLY ****

PAINT TABLE

PAINT PER ALM STD 114

PROPRIETARY AND CONFIDENTIAL

THE INFORMATION CONTAINED IN THIS DRAWING IS THE SOLE PROPERTY OF ASW, LLC. ANY REPRODUCTION IN PART OR AS A WHOLE WITHOUT THE WRITTEN PERMISSION OF ASW, LLC IS PROHIBITED.

UNLESS OTHERWISE SPECIFIED:

DIMENSIONS ARE IN INCHES
TOLERANCES:
FRACTIONAL ± 1/16"
ANGULAR: MACH ± 1°
X.X ± 0.05
X.XX ± 0.01 TORQ ±10%
X.XXX ±0.005 BEND ± 2°

INTERPRET GEOMETRIC TOLERANCING PER:

MATERIAL

FINISH

DO NOT SCALE DRAWING

	NAME	DATE
DRAWN		
CHECKED		
ENG APPR.		
MFG APPR.		
Q.A.		

COMMENTS:

AMERICAN LANDMASTER

DASH ASSEMBLY 1

SIZE	DWG. NO.	REV
B	CA00076	0

SCALE: 1:5 WEIGHT: SHEET 1 OF 1

ITEM NO.	PART NUMBER	DESCRIPTION	QTY.
1	18387	LEVER, PARK BRAKE	1
2	2-50005	NUT, 5/16-18 KEPS	8
3	2-50701	WASHER, 5/16 SAE FLAT	4
4	2-50150	BOLT, 5/16-18 X 1 HEX HEAD G5	8

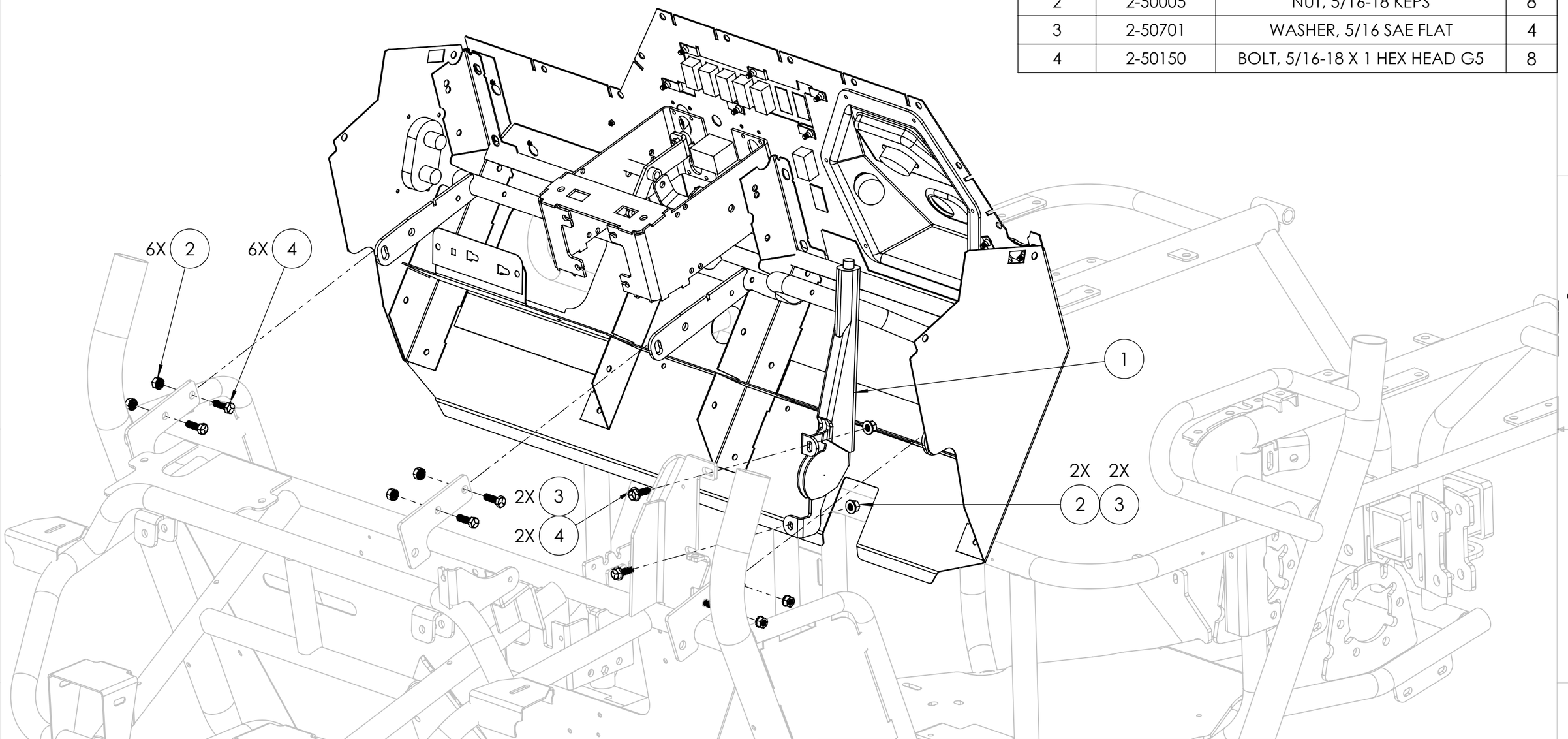

PAINT TABLE

PAINT PER ALM STD 114

PROPRIETARY AND CONFIDENTIAL

THE INFORMATION CONTAINED IN THIS DRAWING IS THE SOLE PROPERTY OF ASW, LLC. ANY REPRODUCTION IN PART OR AS A WHOLE WITHOUT THE WRITTEN PERMISSION OF ASW, LLC IS PROHIBITED.

UNLESS OTHERWISE SPECIFIED:

DIMENSIONS ARE IN INCHES
TOLERANCES:
FRACTIONAL ± 1/16"
ANGULAR: MACH ± 1°
X.X ± 0.05
X.XX ± 0.01 TORQ ± 10%
X.XXX ± 0.005 BEND ± 2°

INTERPRET GEOMETRIC TOLERANCING PER:

MATERIAL

FINISH

DO NOT SCALE DRAWING

	NAME	DATE
DRAWN		
CHECKED		
ENG APPR.		
MFG APPR.		
Q.A.		

COMMENTS:

AMERICAN LANDMASTER

DASH ASSEMBLY 2

SIZE	DWG. NO.	REV
B	CA00076	0

SCALE: 1:5 WEIGHT: SHEET 1 OF 1

**** PRINTED VERSIONS OF THIS DOCUMENT FOR REFERENCE ONLY ****

ITEM NO.	PART NUMBER	DESCRIPTION	QTY.
1	CP00082	WDMT, EV ELECTRICAL COMPONENT BOX	1
2	19896	BRKT, EV BOX SIDE SHORT	2
3	19180	Charger, 48 Volts, 22 amps, Roypow	1
4	15823	NUT, CLIP ON TAPPED - M6 X 1.0; 11 GA MA	2
5	2-50163	BOLT, 5/16IN X 3/4IN HEX HEAD G5	8
6	2-50007	NUT, 5/16-18 NYLOCK	8
7	2-50053	NUT, #10-24 KEPS NUT	4
8	2-50616	SCREW, #10-24 X 3/4IN PAN HEAD-PHILLIPS	12
9	19830	CONVERTER, DC-DC 40AMP SEVCON	1
10	19920	CONTROLLER, EV, SCHWARZMULLER	1
11	2-50086	BOLT, 1/4"-20 X 1.25"	4
12	2-50717	WASHER, 1/4IN SAE FLAT	4
13	19906	FAN, 12V, 120MM X 120MM, IP67	1
14	19905	BRKT, FAN MOUNT EV MOTOR	1
15	2-50630	SCREW, #10 X 3/4IN HEX WASHER TEK-BLK	4
16	2-50770	WASHER, #10 SAE FLAT	14
17	2-50701	WASHER, 5/16 SAE FLAT	4
18	14426	BOLT, M6 X 1.0 X 14	2
19	20005	CONTACTOR, 500 AMP, 12 VOLT COIL, EV, RINCON	1
20	16804	CLAMP, P - 5/8 BUNDLE X 2, 1/4 BOLT	1
21	2-50084	BOLT, 1/4"-20 x .75" BLK	1

PAINT TABLE

PAINT PER ALM STD 114

PROPRIETARY AND CONFIDENTIAL

THE INFORMATION CONTAINED IN THIS DRAWING IS THE SOLE PROPERTY OF ASW, LLC. ANY REPRODUCTION IN PART OR AS A WHOLE WITHOUT THE WRITTEN PERMISSION OF ASW, LLC IS PROHIBITED.

UNLESS OTHERWISE SPECIFIED:
DIMENSIONS ARE IN INCHES
TOLERANCES:
FRACTIONAL ± 1/16"
ANGULAR: MACH ± 1°
X.X ± 0.05
X.XX ± 0.01 TORQ ±10%
X.XXX ±0.005 BEND ± 2°

INTERPRET GEOMETRIC TOLERANCING PER:

MATERIAL

FINISH

DO NOT SCALE DRAWING

	NAME	DATE
DRAWN		
CHECKED	XXX	
ENG APPR.		
MFG APPR.		
Q.A.		

◆ INDICATES CRITICAL DIMENSIONS

COMMENTS:

AMERICAN LANDMASTER

ELECTRIC BOX ASSEMBLY

SIZE	DWG. NO.	REV
B	CA00076	0

SCALE: 1:10 WEIGHT: SHEET 1 OF 2

**** PRINTED VERSIONS OF THIS DOCUMENT FOR REFERENCE ONLY ****

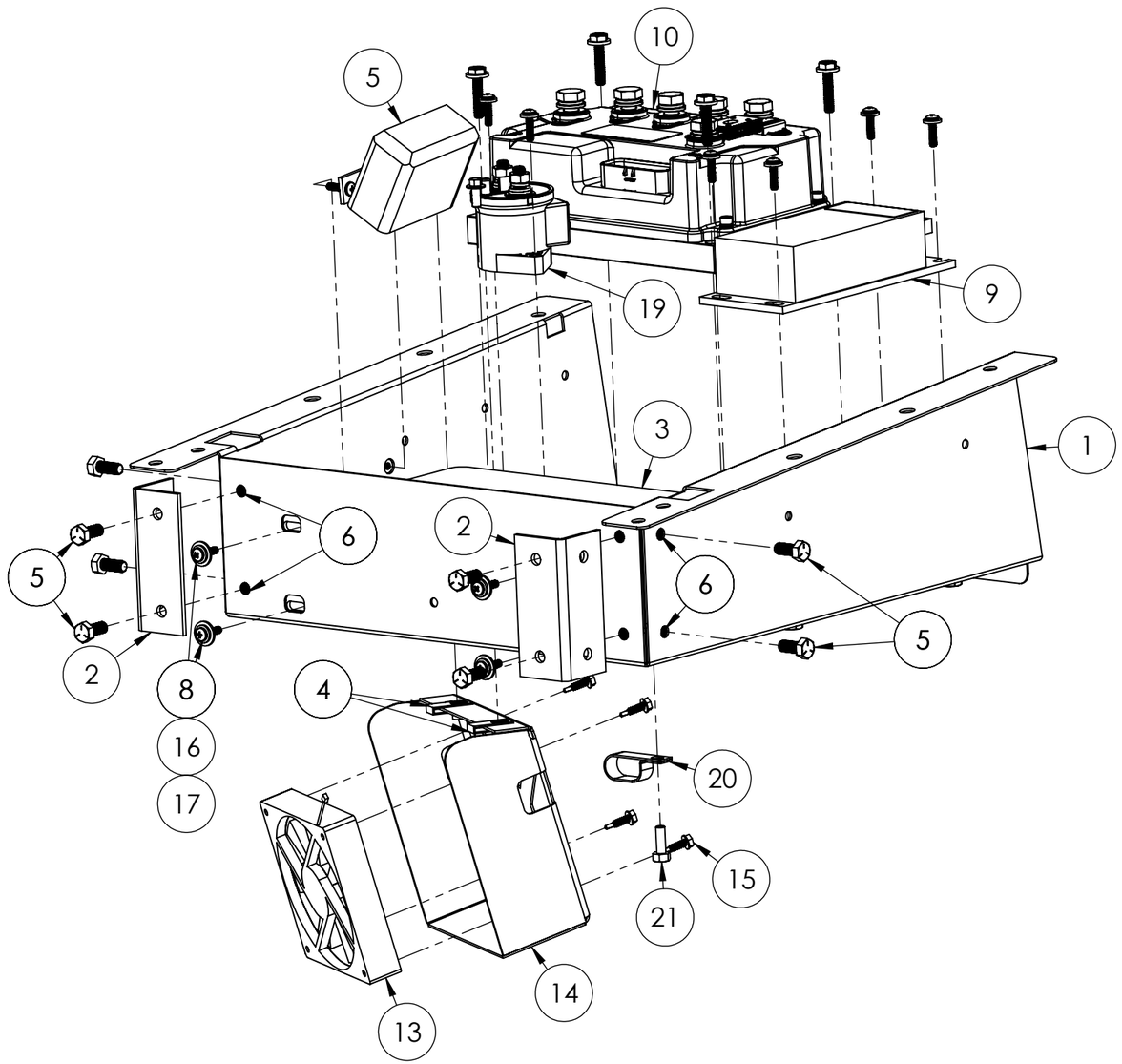

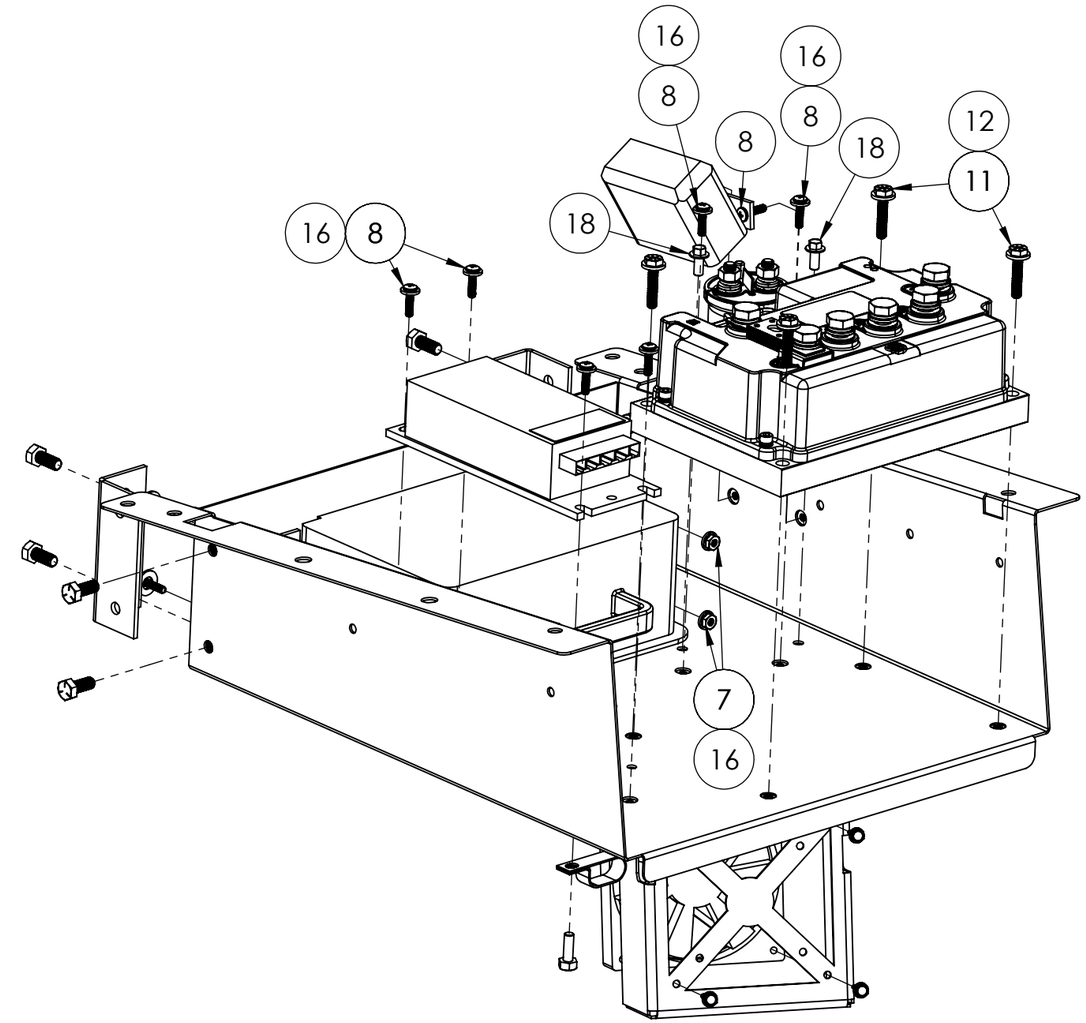

**** PRINTED VERSIONS OF THIS DOCUMENT FOR REFERENCE ONLY ****

PAINT TABLE
PAINT PER ALM STD 114

PROPRIETARY AND CONFIDENTIAL

THE INFORMATION CONTAINED IN THIS DRAWING IS THE SOLE PROPERTY OF ASW, LLC. ANY REPRODUCTION IN PART OR AS A WHOLE WITHOUT THE WRITTEN PERMISSION OF ASW, LLC IS PROHIBITED.

UNLESS OTHERWISE SPECIFIED:

DIMENSIONS ARE IN INCHES
TOLERANCES:
FRACTIONAL ± 1/16"
ANGULAR: MACH ± 1°
X.X ± 0.05
X.XX ± 0.01 TORQ ±10%
X.XXX ±0.005 BEND ± 2°

INTERPRET GEOMETRIC TOLERANCING PER:

MATERIAL

FINISH

DO NOT SCALE DRAWING

	NAME	DATE
DRAWN		
CHECKED	XXX	
ENG APPR.		
MFG APPR.		
Q.A.		

◆ INDICATES CRITICAL DIMENSIONS

COMMENTS:

AMERICAN LANDMASTER

ELECTRIC BOX ASSEMBLY

SIZE	DWG. NO.	REV
B	CA00076	0
SCALE: 1:10	WEIGHT:	SHEET 2 OF 2

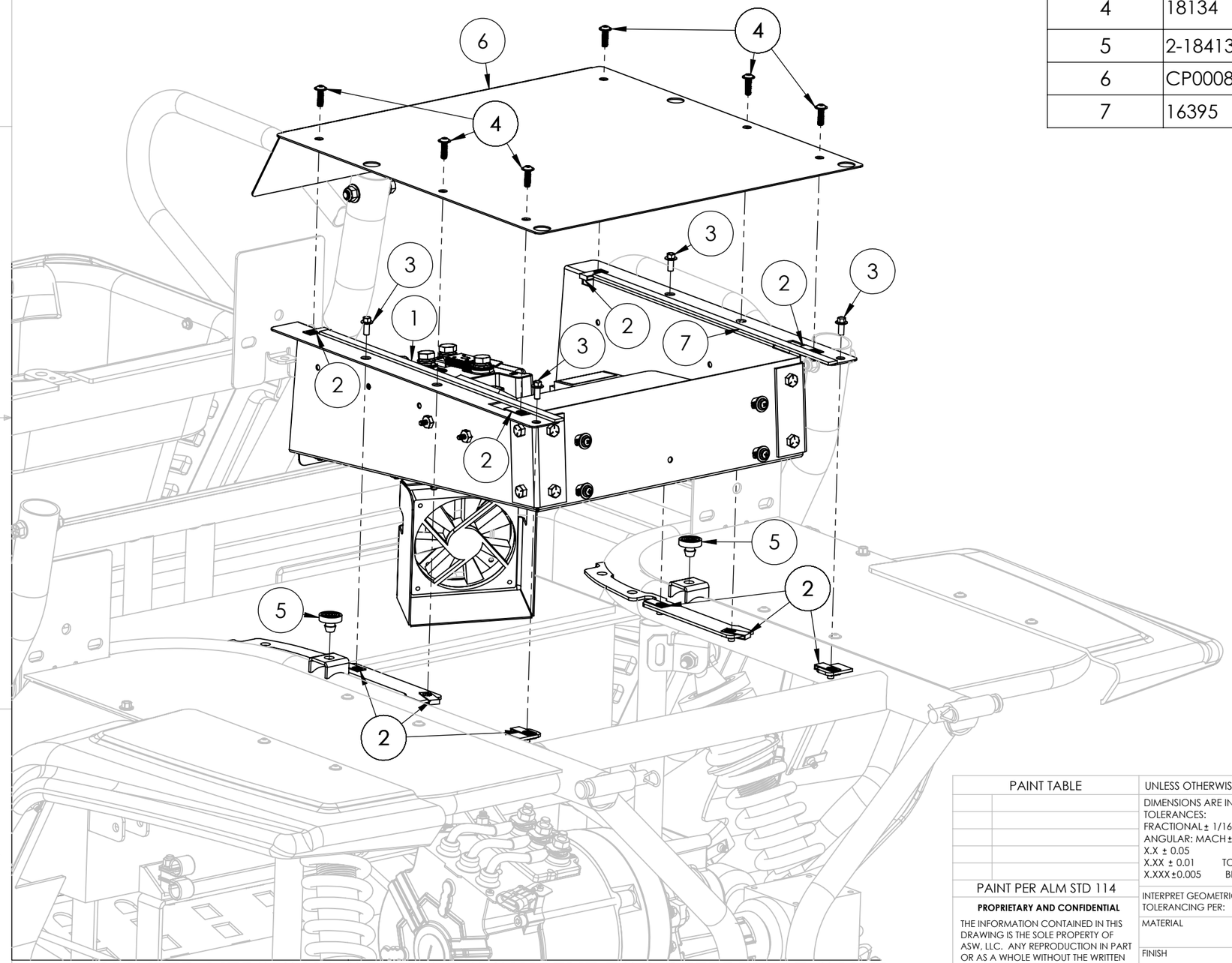

ITEM NO.	PART NUMBER	DESCRIPTION	QTY.
1	20025	ASM, AMP ELECTRIC BOX	1
2	15823	NUT, CLIP ON TAPPED - M6 X 1.0; 11 GA MA	85
3	14426	BOLT, M6 X 1.0 X 14	24
4	18134	SCREW, M6 X 1 X 20 WIDE FLG BUTT HD SS	63
5	2-18413	BED BUMPER 1.5 INCH (RUBBER)	2
6	CP00085	PANEL, 60 DEGREE EV BOX LID	1
7	16395	SEAL, 1/8 X 1/2 X 43 - SEE SPEC	1

**** PRINTED VERSIONS OF THIS DOCUMENT FOR REFERENCE ONLY ****

PAINT TABLE

PAINT PER ALM STD 114

PROPRIETARY AND CONFIDENTIAL

THE INFORMATION CONTAINED IN THIS DRAWING IS THE SOLE PROPERTY OF ASW, LLC. ANY REPRODUCTION IN PART OR AS A WHOLE WITHOUT THE WRITTEN PERMISSION OF ASW, LLC IS PROHIBITED.

UNLESS OTHERWISE SPECIFIED:

DIMENSIONS ARE IN INCHES
TOLERANCES:
FRACTIONAL ± 1/16"
ANGULAR: MACH ± 1°
X.X ± 0.05
X.XX ± 0.01 TORQ ±10%
X.XXX ±0.005 BEND ± 2°

INTERPRET GEOMETRIC TOLERANCING PER:

MATERIAL

FINISH

DO NOT SCALE DRAWING

	NAME	DATE
DRAWN		
CHECKED	XXX	
ENG APPR.		
MFG APPR.		
Q.A.		

◆ INDICATES CRITICAL DIMENSIONS

COMMENTS:

AMERICAN LANDMASTER

ELECTRIC BOX ASSEMBLY 2

SIZE	DWG. NO.	REV
B	CA00076	0

SCALE: 1:50 WEIGHT: SHEET 1 OF 1

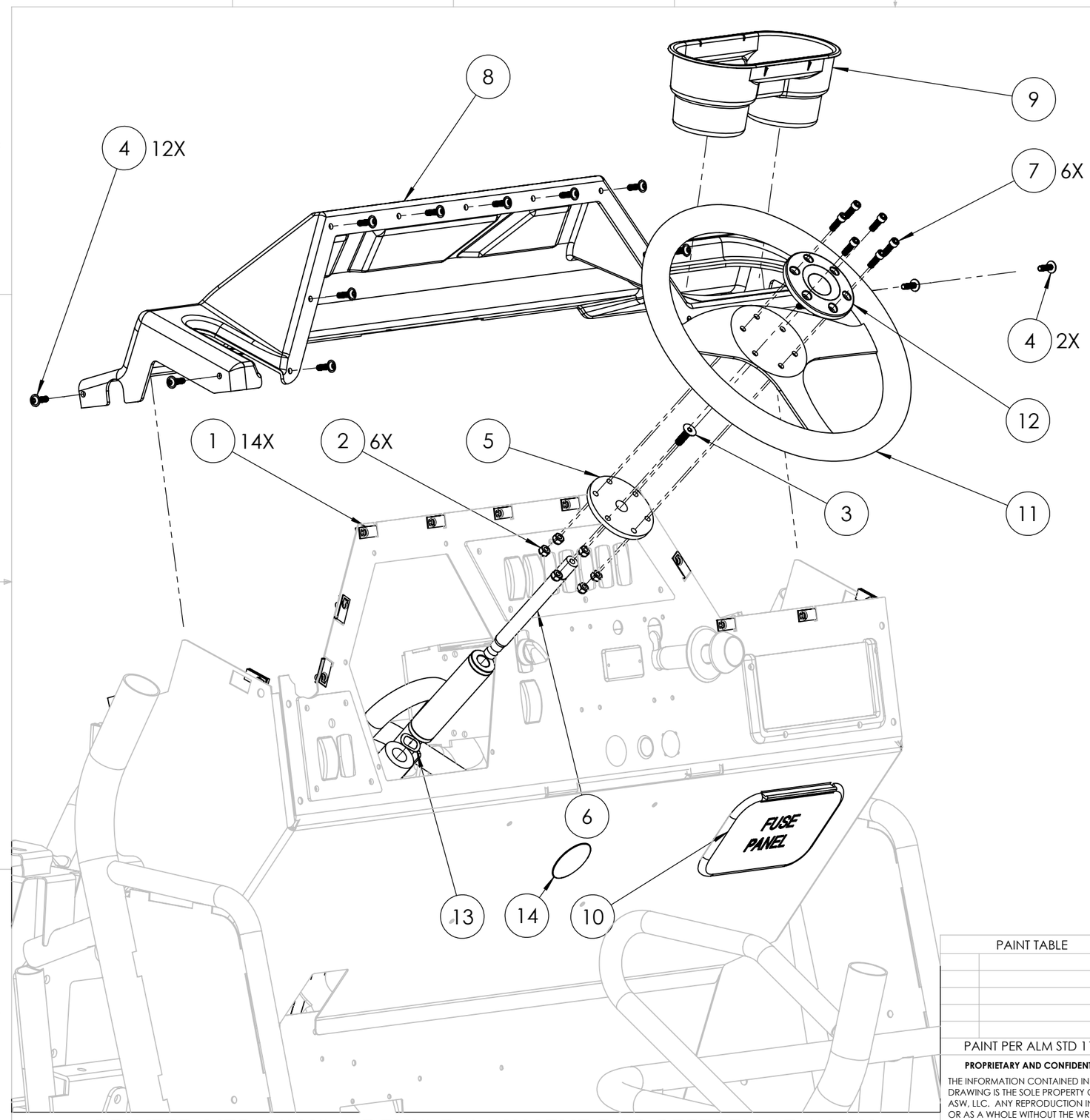

ITEM NO.	PART NUMBER	DESCRIPTION	QTY.
1	15823	NUT, CLIP ON TAPPED - M6 X 1.0; 11 GA MA	14
2	2-50001	NUT, 1/4-20 NYLON LOCKING	6
3	2-50098	BOLT, TAPERED 5/16-18 X 1IN	1
4	18134	SCREW, M6 X 1 X 20 WIDE FLG BUTT HD SS	14
5	2-18169	STEERING HUB DISK (SEE SPECS)	1
6	2-18170	STEERING HUB SHAFT	1
7	2-50636	BOLT, 1/4IN X 3/4IN SOCKET HEAD (SS)	6
8	18072	DASH, THERMOFORMED TOP	1
9	14842	CUP HOLDER - 200 SERIES	1
10	18361	PANEL, DASH ACCESS	1
11	14845	STEERING WHEEL - 200S	1
12	14846	CAP, STEERING WHEEL BLK - 200S	1
13	2-50708	WASHER, 0.642in ID x 1in OD - WAVE	1
14	19565	CAP,2" DIA .016-.215" PANEL	1

**** PRINTED VERSIONS OF THIS DOCUMENT FOR REFERENCE ONLY ****

PAINT TABLE

PAINT PER ALM STD 114

PROPRIETARY AND CONFIDENTIAL

THE INFORMATION CONTAINED IN THIS DRAWING IS THE SOLE PROPERTY OF ASW, LLC. ANY REPRODUCTION IN PART OR AS A WHOLE WITHOUT THE WRITTEN PERMISSION OF ASW, LLC IS PROHIBITED.

UNLESS OTHERWISE SPECIFIED:

DIMENSIONS ARE IN INCHES
TOLERANCES:
FRACTIONAL ± 1/16"
ANGULAR: MACH ± 1°
X.X ± 0.05
X.XX ± 0.01 TORQ ±10%
X.XXX ±0.005 BEND ± 2°

INTERPRET GEOMETRIC TOLERANCING PER:

MATERIAL

FINISH

DO NOT SCALE DRAWING

	NAME	DATE
DRAWN		
CHECKED		
ENG APPR.		
MFG APPR.		
Q.A.		

COMMENTS:

AMERICAN LANDMASTER

DASH TOP & STEERING WHEEL ASSEMBLY

SIZE	DWG. NO.	REV
B	CA00076	0

SCALE: 1:5 WEIGHT: SHEET 1 OF 1

ITEM NO.	PART NUMBER	DESCRIPTION	QTY.
1	18609	LIGHT, HEAD LIGHT / WORK LIGHT	2

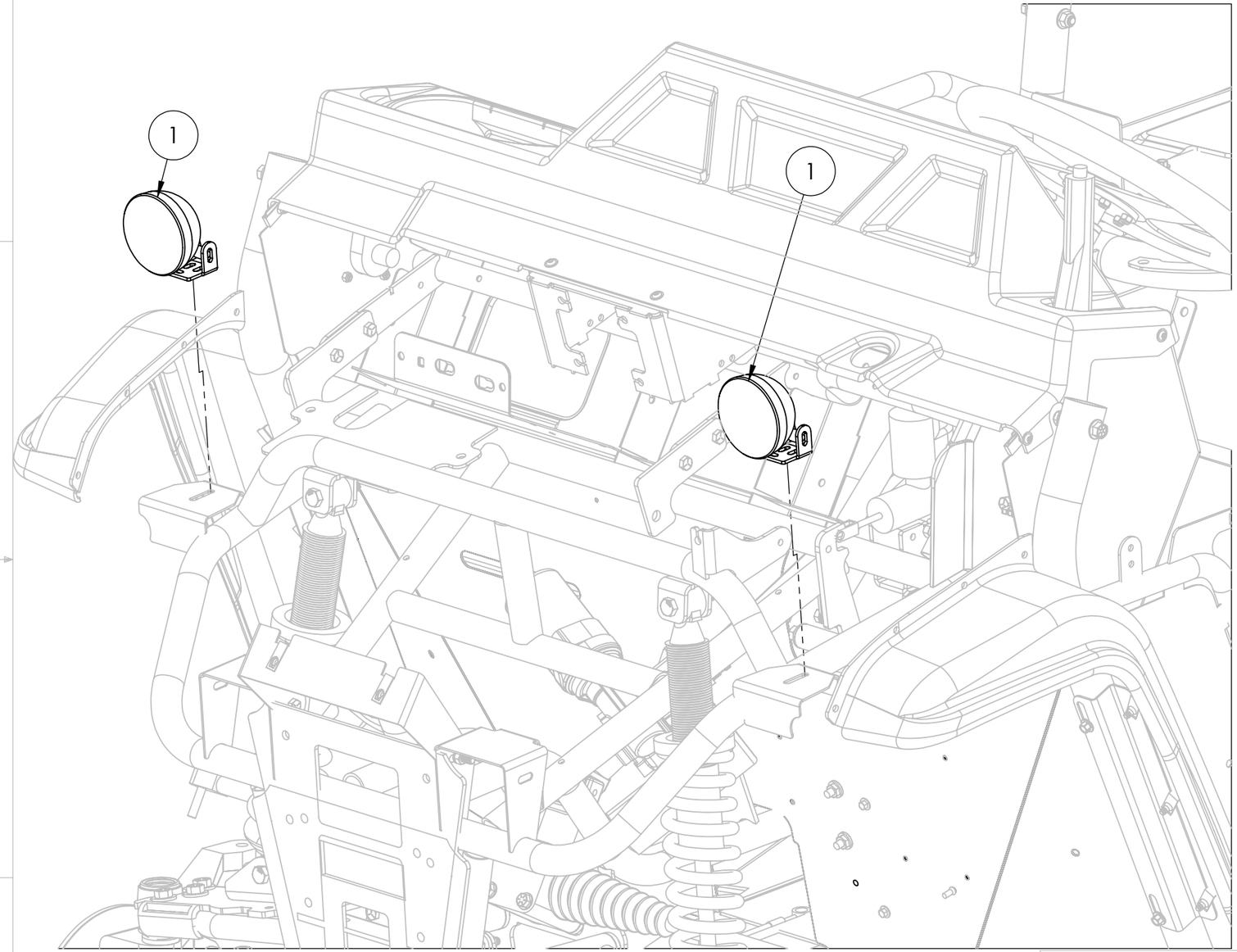

PAINT TABLE

PAINT PER ALM STD 114

PROPRIETARY AND CONFIDENTIAL

THE INFORMATION CONTAINED IN THIS DRAWING IS THE SOLE PROPERTY OF ASW, LLC. ANY REPRODUCTION IN PART OR AS A WHOLE WITHOUT THE WRITTEN PERMISSION OF ASW, LLC IS PROHIBITED.

UNLESS OTHERWISE SPECIFIED:
DIMENSIONS ARE IN INCHES
TOLERANCES:
FRACTIONAL ± 1/16"
ANGULAR: MACH ± 1°
X.X ± 0.05
X.XX ± 0.01 TORQ ±10%
X.XXX ±0.005 BEND ± 2°

INTERPRET GEOMETRIC TOLERANCING PER:

MATERIAL

FINISH

DO NOT SCALE DRAWING

	NAME	DATE
DRAWN		
CHECKED	XXX	
ENG APPR.		
MFG APPR.		
Q.A.		

◆ INDICATES CRITICAL DIMENSIONS

COMMENTS:

AMERICAN LANDMASTER

LIGHTS ASSEMBLY

SIZE	DWG. NO.	REV
B	CA00076	0
SCALE: 1:50	WEIGHT:	SHEET 1 OF 1

**** PRINTED VERSIONS OF THIS DOCUMENT FOR REFERENCE ONLY ****

ITEM NO.	PART NUMBER	DESCRIPTION	QTY.
1	2-50770	WASHER, #10 SAE FLAT	5
2	2-50630	SCREW, #10 X 3/4IN HEX WASHER TEK-BLK	5
3	19450	SURROUND, STR FOAM	1
4	19521	POCKET, STORAGE PASS SIDE	1
5	19574	SCREW, #6 X 0.50 THREAD FORM SS	5
6	19575	WASHER, FLAT #6 X 0.625 SS	5

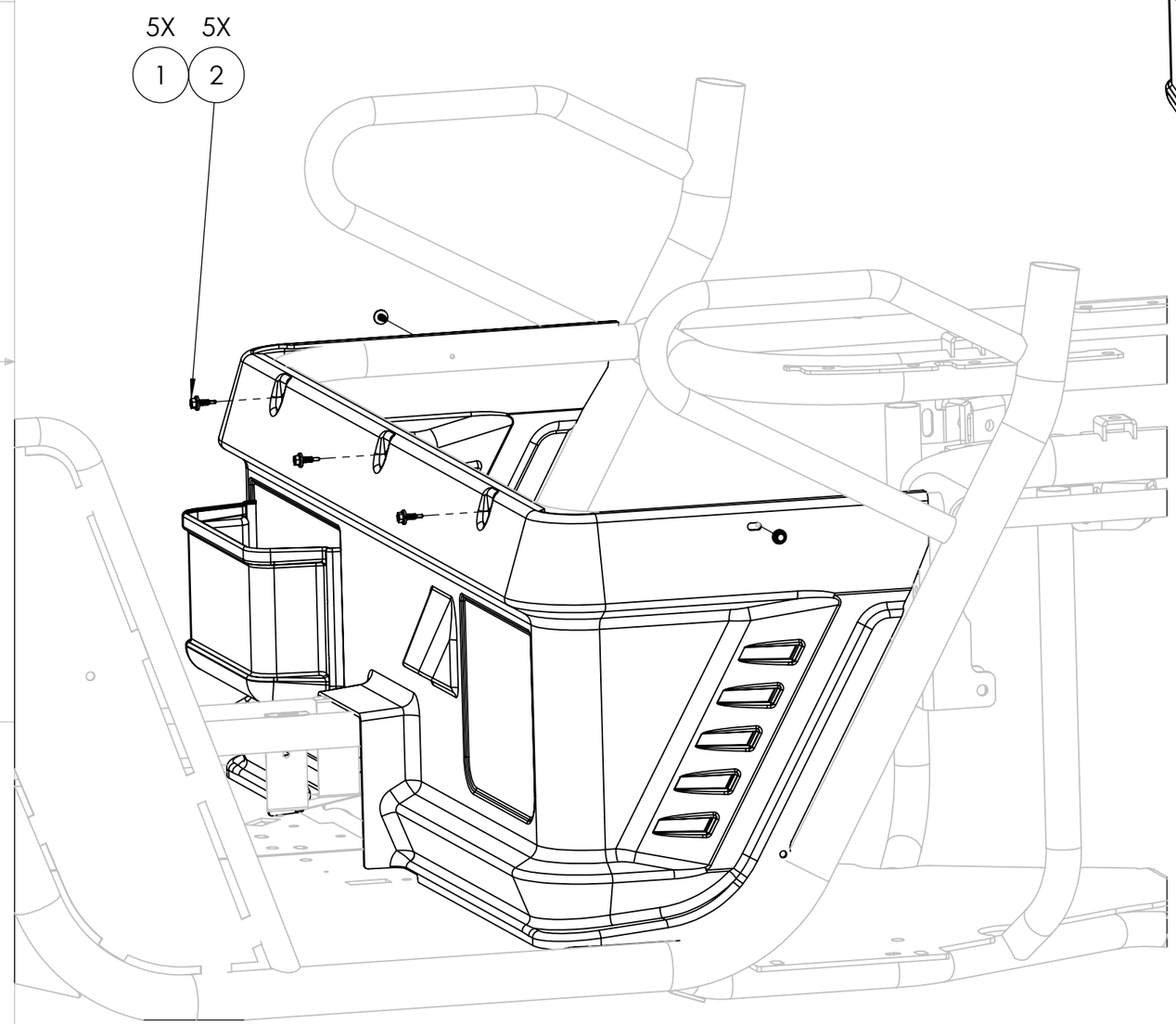

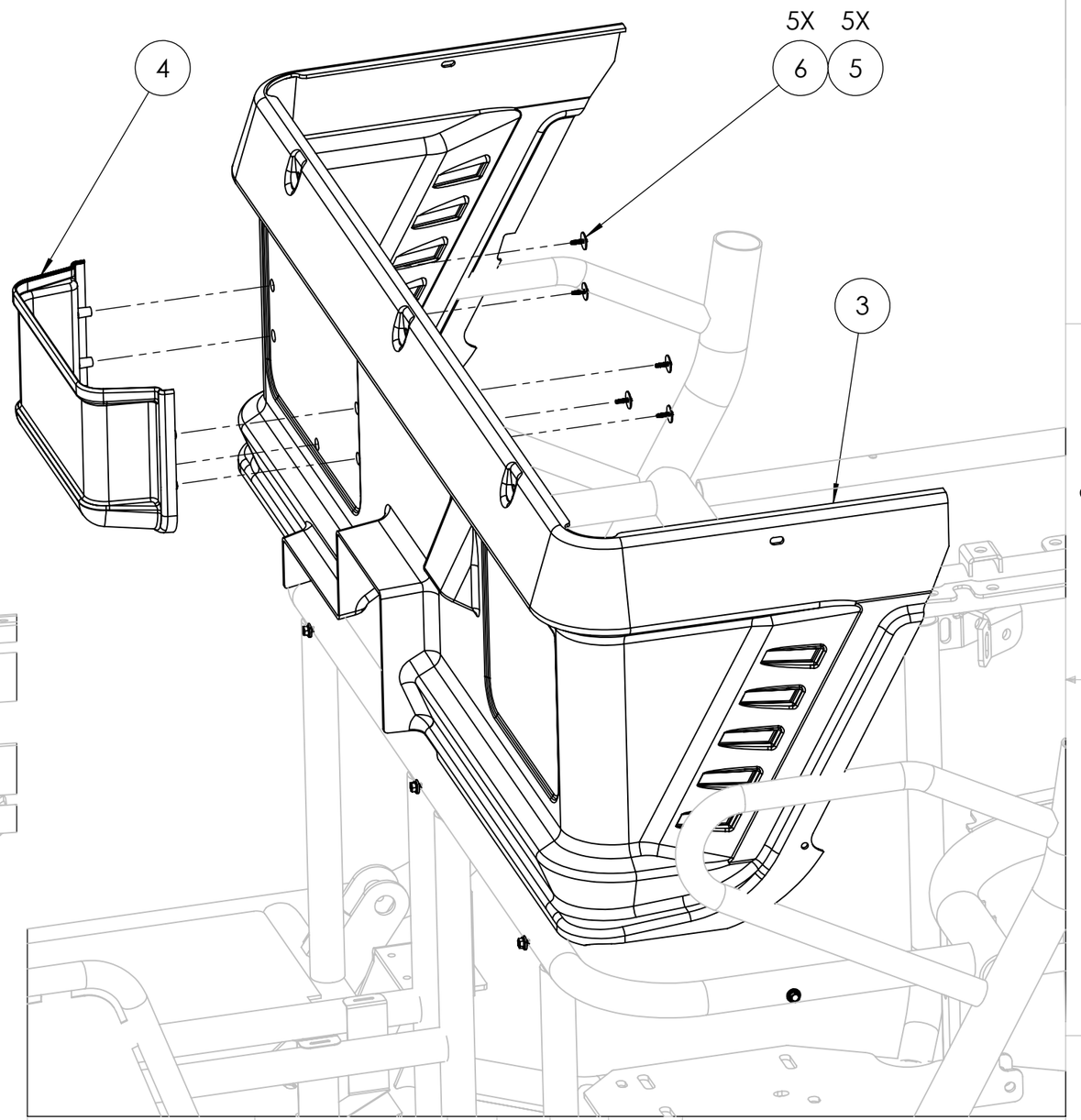

**** PRINTED VERSIONS OF THIS DOCUMENT FOR REFERENCE ONLY ****

PAINT TABLE

PAINT PER ALM STD 114

PROPRIETARY AND CONFIDENTIAL

THE INFORMATION CONTAINED IN THIS DRAWING IS THE SOLE PROPERTY OF ASW, LLC. ANY REPRODUCTION IN PART OR AS A WHOLE WITHOUT THE WRITTEN PERMISSION OF ASW, LLC IS PROHIBITED.

UNLESS OTHERWISE SPECIFIED:

DIMENSIONS ARE IN INCHES
TOLERANCES:
FRACTIONAL ± 1/16"
ANGULAR: MACH ± 1°
X.X ± 0.05
X.XX ± 0.01 TORQ ± 10%
X.XXX ± 0.005 BEND ± 2°

INTERPRET GEOMETRIC TOLERANCING PER:

MATERIAL

FINISH

DO NOT SCALE DRAWING

	NAME	DATE
DRAWN		
CHECKED		
ENG APPR.		
MFG APPR.		
Q.A.		

COMMENTS:

AMERICAN LANDMASTER

SEAT SURROUND ASSEMBLY

SIZE	DWG. NO.	REV
B	CA00076	0

SCALE: 1:5 WEIGHT: SHEET 1 OF 1

ITEM NO.	PART NUMBER	DESCRIPTION	QTY.
1	CP00229	SEAT, BUCKET SK130	2
2	CP00232	WDMT, BUCKET SEAT SUPPORT	1
3	16300	NUT, 5/16"-18 NYLON LOCK W/ FLANGE ZN	8

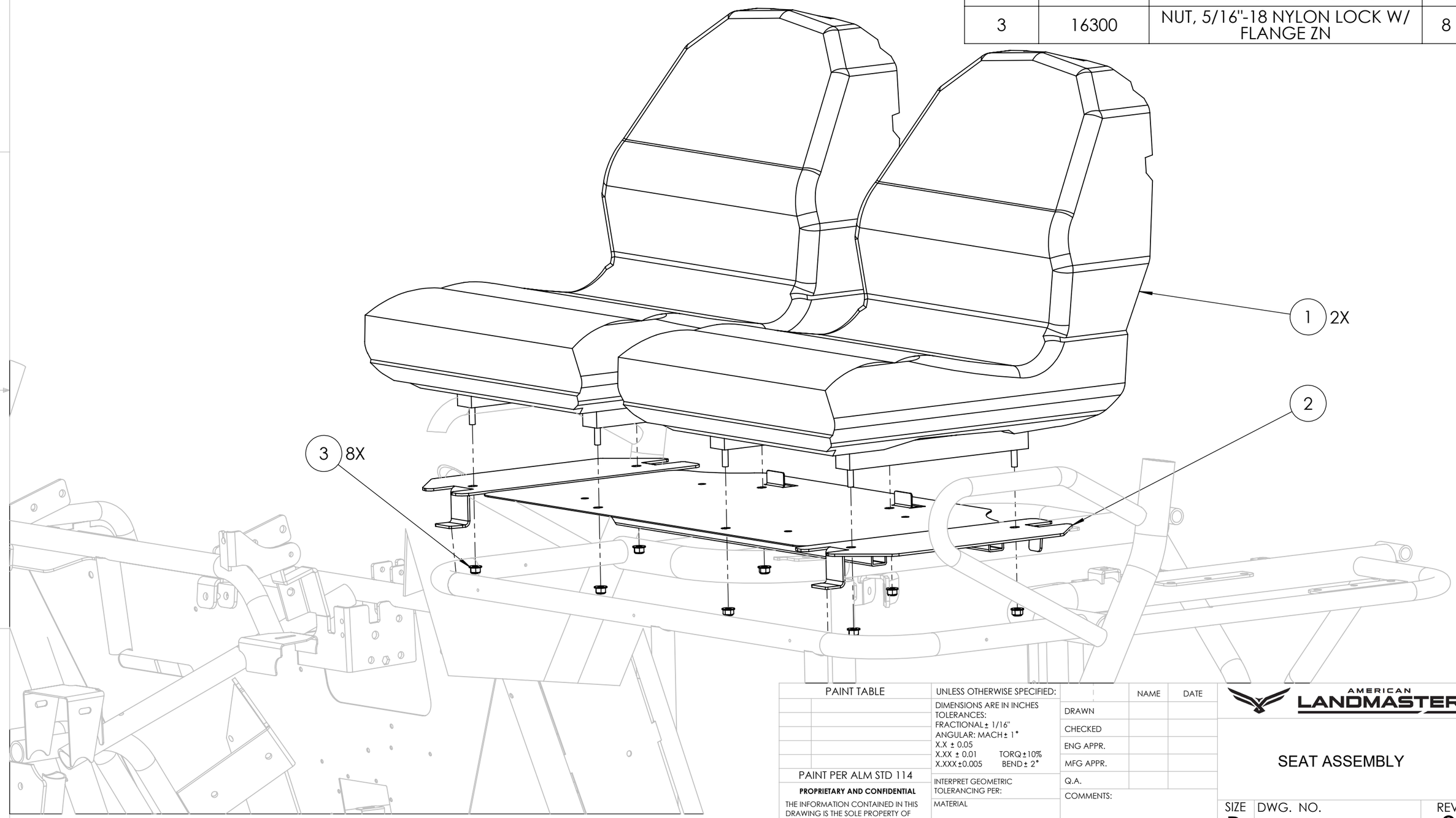

**** PRINTED VERSIONS OF THIS DOCUMENT FOR REFERENCE ONLY ****

PAINT TABLE

PAINT PER ALM STD 114

PROPRIETARY AND CONFIDENTIAL

THE INFORMATION CONTAINED IN THIS DRAWING IS THE SOLE PROPERTY OF ASW, LLC. ANY REPRODUCTION IN PART OR AS A WHOLE WITHOUT THE WRITTEN PERMISSION OF ASW, LLC IS PROHIBITED.

UNLESS OTHERWISE SPECIFIED:

DIMENSIONS ARE IN INCHES
TOLERANCES:
FRACTIONAL ± 1/16"
ANGULAR: MACH ± 1°
X.X ± 0.05
X.XX ± 0.01 TORQ ± 10%
X.XXX ± 0.005 BEND ± 2°

INTERPRET GEOMETRIC TOLERANCING PER:

MATERIAL

FINISH

DO NOT SCALE DRAWING

	NAME	DATE
DRAWN		
CHECKED		
ENG APPR.		
MFG APPR.		
Q.A.		

COMMENTS:

AMERICAN LANDMASTER

SEAT ASSEMBLY

SIZE	DWG. NO.	REV
B	CA00076	0

SCALE: 1:5 WEIGHT: SHEET 1 OF 1

ITEM NO.	PART NUMBER	DESCRIPTION	QTY.
1	CP00232	WDMT, BUCKET SEAT SUPPORT	1

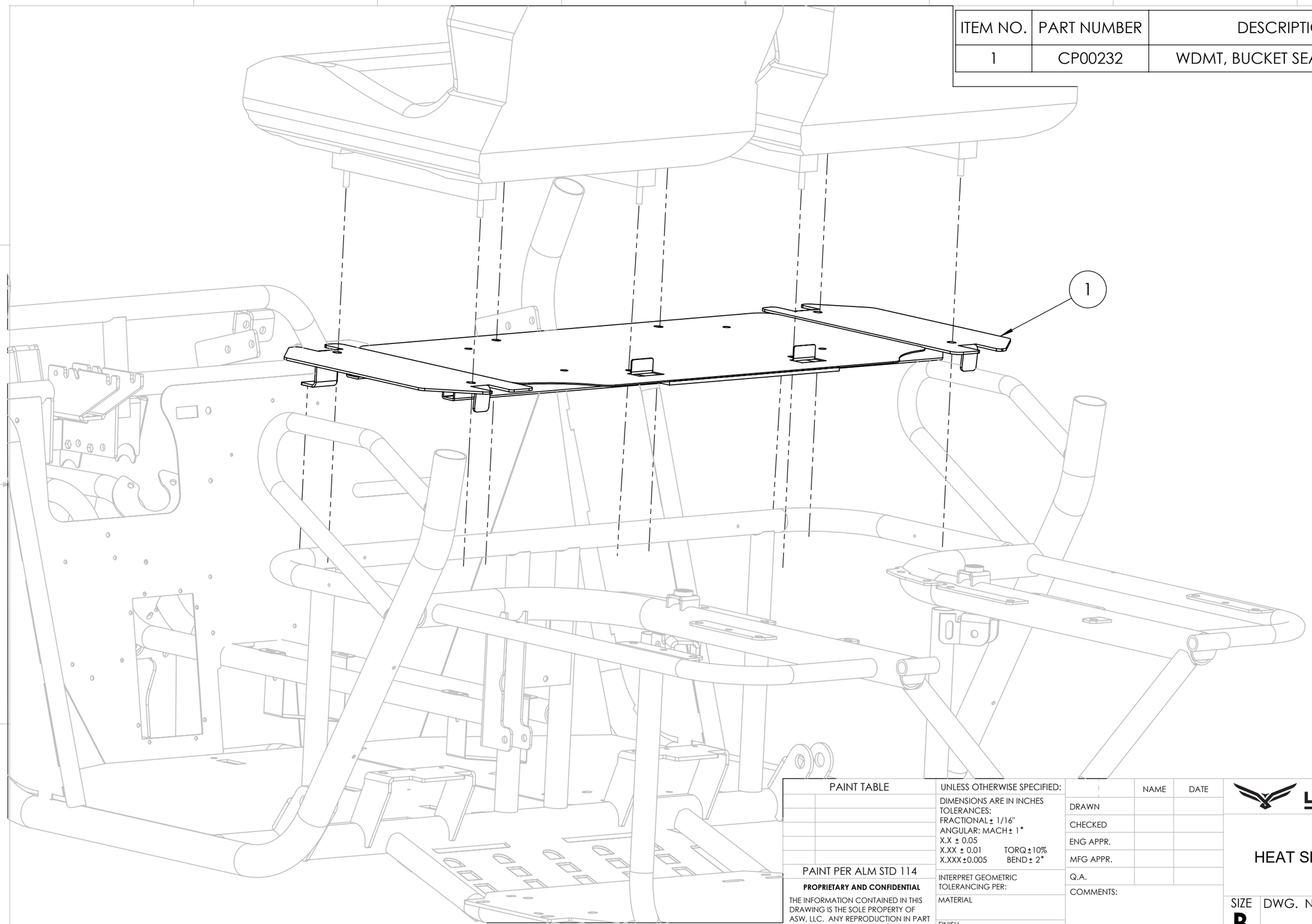

**** PRINTED VERSIONS OF THIS DOCUMENT FOR REFERENCE ONLY ****

PAINT TABLE

PAINT PER ALM STD 114

PROPRIETARY AND CONFIDENTIAL

THE INFORMATION CONTAINED IN THIS DRAWING IS THE SOLE PROPERTY OF ASW, LLC. ANY REPRODUCTION IN PART OR AS A WHOLE WITHOUT THE WRITTEN PERMISSION OF ASW, LLC IS PROHIBITED.

UNLESS OTHERWISE SPECIFIED:

DIMENSIONS ARE IN INCHES
TOLERANCES:
FRACTIONAL ± 1/16"
ANGULAR: MACH ± 1°
X.X ± 0.05
X.XX ± 0.01 TORQ ±10%
X.XXX ±0.005 BEND ± 2°

INTERPRET GEOMETRIC TOLERANCING PER:

MATERIAL

FINISH

DO NOT SCALE DRAWING

	NAME	DATE
DRAWN		
CHECKED		
ENG APPR.		
MFG APPR.		
Q.A.		

COMMENTS:

AMERICAN LANDMASTER

HEAT SHEILD ASSEMBLY

SIZE	DWG. NO.	REV
B	CA00076	0

SCALE: 1:5 WEIGHT: SHEET 1 OF 1

ITEM NO.	PART NUMBER	DESCRIPTION	QTY.
1	18155-1	SKIRT, SIDE LH - BLK	1
2	19225-1	SKIRT, EV SIDE RH - SILVER	1
3	18508	PANEL, FENDER TOP LH NO DUMP	1
4	18509	PANEL, FENDER TOP RH	1
5	15823	NUT, CLIP ON TAPPED - M6 X 1.0; 11 GA MA	8
6	18134	SCREW, M6 X 1 X 20 WIDE FLG BUTT HD SS	4
7	19076	SCREW, 5/16 X1.00 UNSLT HWSDS	6

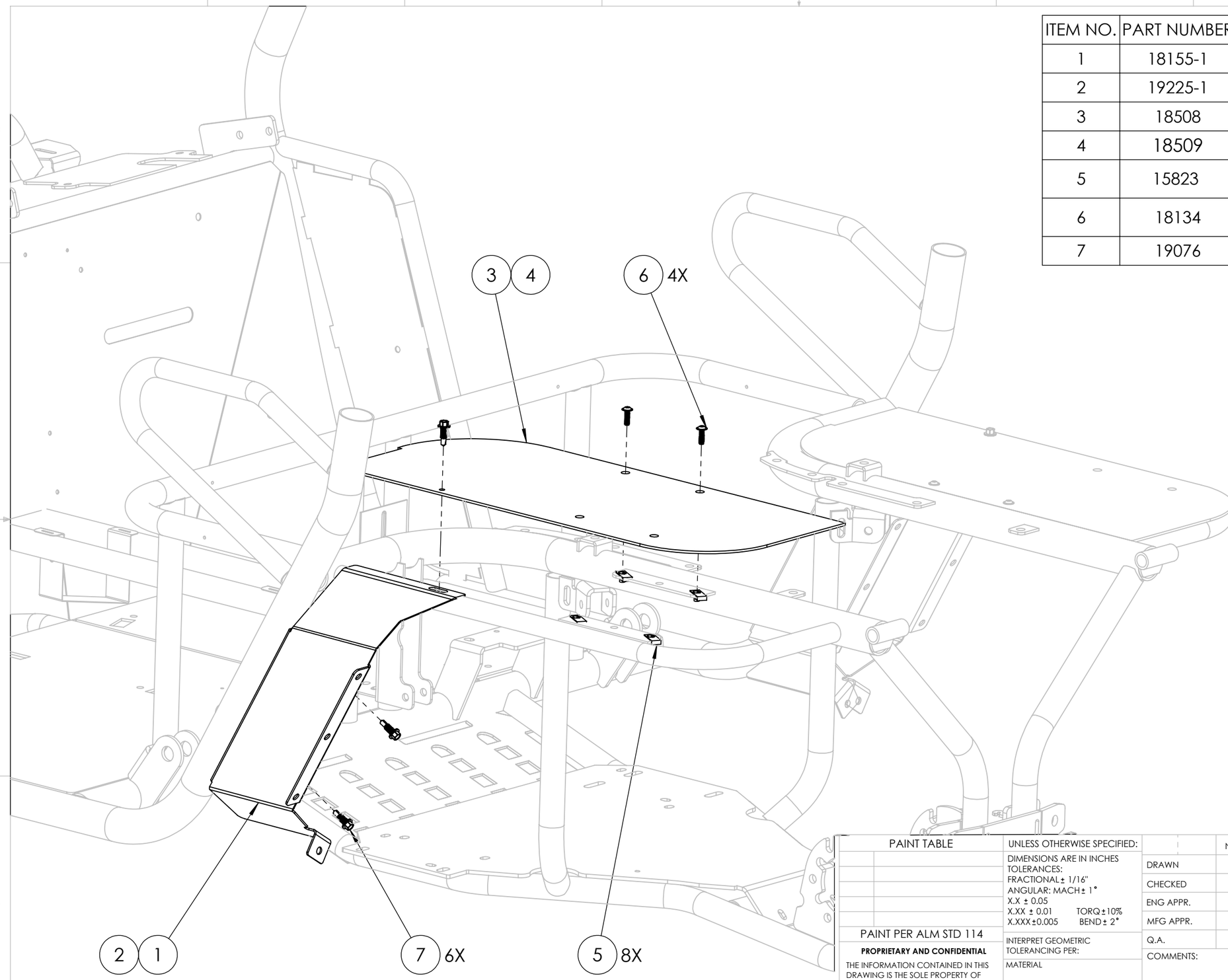

**** PRINTED VERSIONS OF THIS DOCUMENT FOR REFERENCE ONLY ****

PAINT TABLE

PAINT PER ALM STD 114

PROPRIETARY AND CONFIDENTIAL

THE INFORMATION CONTAINED IN THIS DRAWING IS THE SOLE PROPERTY OF ASW, LLC. ANY REPRODUCTION IN PART OR AS A WHOLE WITHOUT THE WRITTEN PERMISSION OF ASW, LLC IS PROHIBITED.

UNLESS OTHERWISE SPECIFIED:

DIMENSIONS ARE IN INCHES
TOLERANCES:
FRACTIONAL ± 1/16"
ANGULAR: MACH ± 1°
X.X ± 0.05
X.XX ± 0.01 TORQ ±10%
X.XXX ±0.005 BEND ± 2°

INTERPRET GEOMETRIC TOLERANCING PER:

MATERIAL

FINISH

DO NOT SCALE DRAWING

	NAME	DATE
DRAWN		
CHECKED		
ENG APPR.		
MFG APPR.		
Q.A.		

COMMENTS:

AMERICAN LANDMASTER

SKIRT AND UPPER FENDER ASSEMBLY

SIZE	DWG. NO.	REV
B	CA00076	0

SCALE: 1:5 | WEIGHT: | SHEET 1 OF 1

ITEM NO.	PART NUMBER	DESCRIPTION	QTY.
1	19189	Power Port, AC, Weather Sealed, Noco	1
2	16367	RIVET, 3/16" X .575"-AL-BLK	3
3	19969	CORD, EV, INTERCONNECT, CHARGER	1

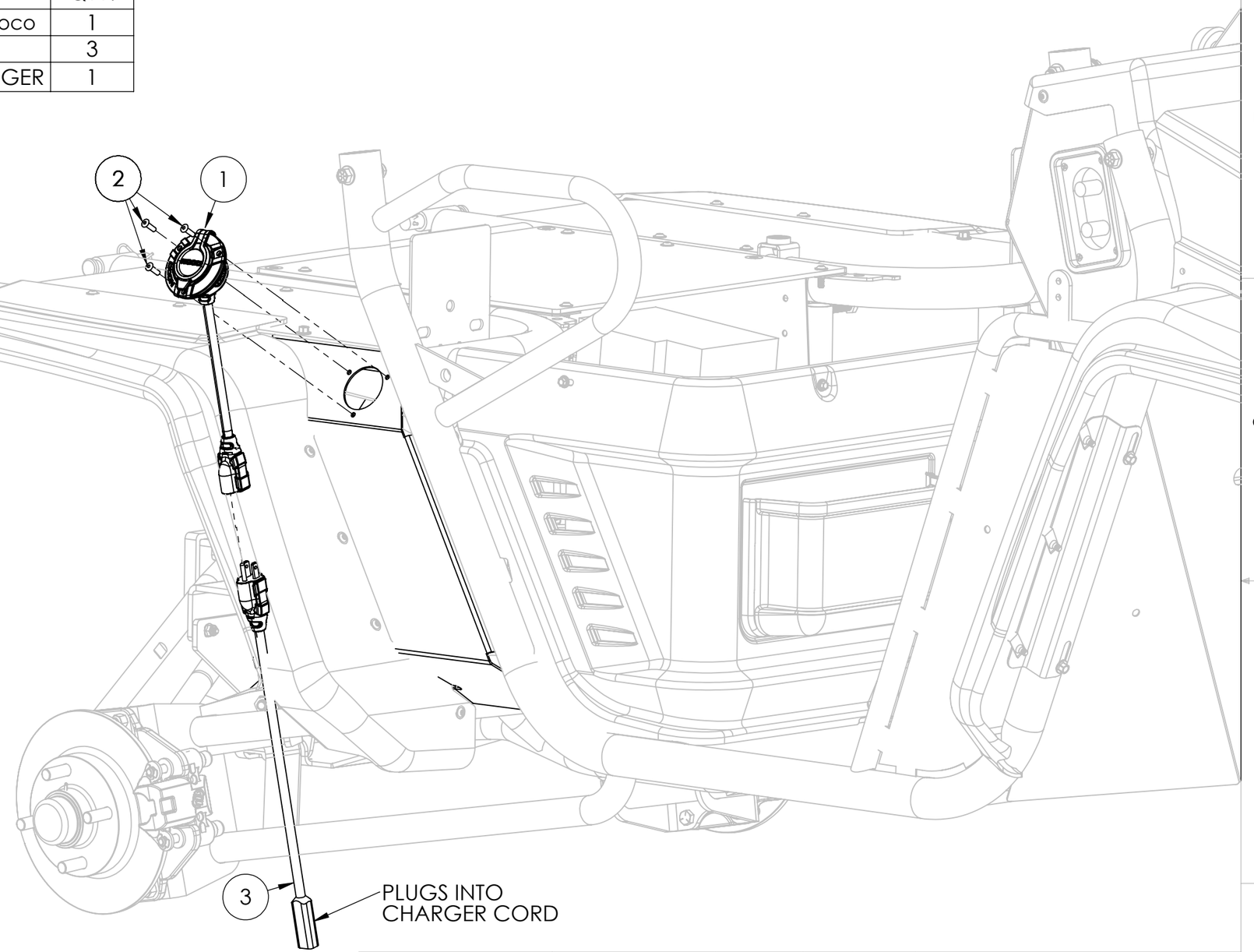

PAINT TABLE	
PAINT PER ALM STD 114	

PROPRIETARY AND CONFIDENTIAL

THE INFORMATION CONTAINED IN THIS DRAWING IS THE SOLE PROPERTY OF ASW, LLC. ANY REPRODUCTION IN PART OR AS A WHOLE WITHOUT THE WRITTEN PERMISSION OF ASW, LLC IS PROHIBITED.

UNLESS OTHERWISE SPECIFIED:

DIMENSIONS ARE IN INCHES
TOLERANCES:
FRACTIONAL ± 1/16"
ANGULAR: MACH ± 1°
X.X ± 0.05
X.XX ± 0.01 TORQ ± 10%
X.XXX ± 0.005 BEND ± 2°

INTERPRET GEOMETRIC TOLERANCING PER:

MATERIAL

FINISH

DO NOT SCALE DRAWING

	NAME	DATE
DRAWN		
CHECKED	XXX	
ENG APPR.		
MFG APPR.		
Q.A.		

◆ INDICATES CRITICAL DIMENSIONS

COMMENTS:

AMERICAN LANDMASTER

CHARGER PORT ASSEMBLY

SIZE	DWG. NO.	REV
B	CA00076	0

SCALE: 1:50 WEIGHT: SHEET 1 OF 1

**** PRINTED VERSIONS OF THIS DOCUMENT FOR REFERENCE ONLY ****

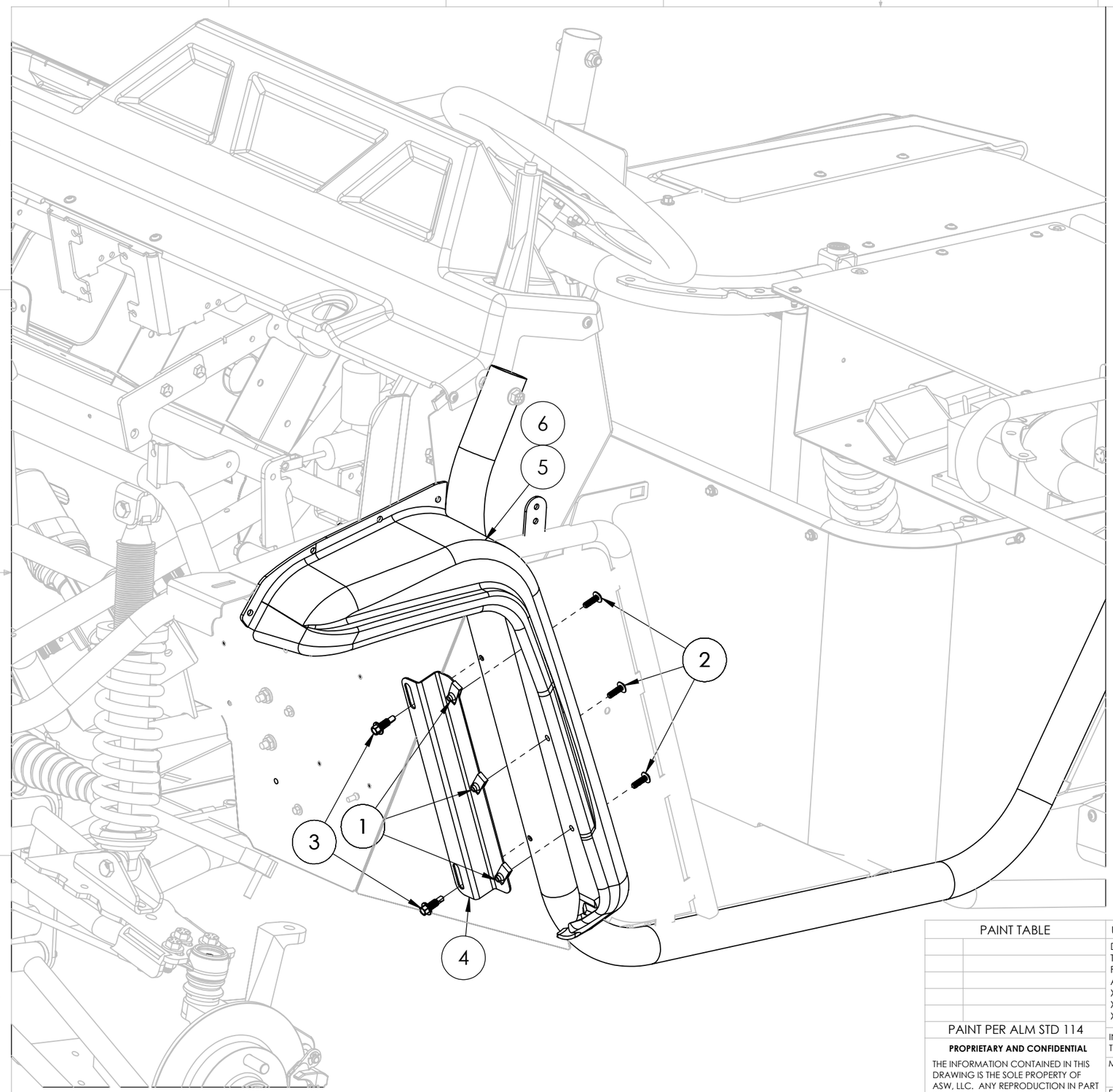

ITEM NO.	PART NUMBER	DESCRIPTION	QTY.
1	15823	NUT, CLIP ON TAPPED - M6 X 1.0; 11 GA MA	6
2	18134	SCREW, M6 X 1 X 20 WIDE FLG BUTT HD SS	6
3	19076	SCREW, 5/16 X1.00 UNSLT HWSDS	4
4	18133-1	BRKT, FRONT FENDER	2
5	18166	FENDER, FRONT LH - 56	1
6	18167	FENDER, FRONT RH - 56	1

**** PRINTED VERSIONS OF THIS DOCUMENT FOR REFERENCE ONLY ****

PAINT TABLE

PAINT PER ALM STD 114

PROPRIETARY AND CONFIDENTIAL

THE INFORMATION CONTAINED IN THIS DRAWING IS THE SOLE PROPERTY OF ASW, LLC. ANY REPRODUCTION IN PART OR AS A WHOLE WITHOUT THE WRITTEN PERMISSION OF ASW, LLC IS PROHIBITED.

UNLESS OTHERWISE SPECIFIED:
DIMENSIONS ARE IN INCHES
TOLERANCES:
FRACTIONAL ± 1/16"
ANGULAR: MACH ± 1°
X.X ± 0.05
X.XX ± 0.01 TORQ ±10%
X.XXX ±0.005 BEND ± 2°

INTERPRET GEOMETRIC TOLERANCING PER:

MATERIAL

FINISH

DO NOT SCALE DRAWING

	NAME	DATE
DRAWN		
CHECKED	XXX	
ENG APPR.		
MFG APPR.		
Q.A.		

◆ INDICATES CRITICAL DIMENSIONS

COMMENTS:

AMERICAN LANDMASTER

FRONT FENDER ASSEMBLY

SIZE	DWG. NO.	REV
B	CA00076	0

SCALE: 1:50 WEIGHT: SHEET 1 OF 1

ITEM NO.	PART NUMBER	DESCRIPTION	QTY.
1	18162	FENDER, REAR LH - 56	1
2	18163	FENDER, REAR RH - 56	1
3	15823	NUT, CLIP ON TAPPED - M6 X 1.0; 11 GA MA	8
4	18134	SCREW, M6 X 1 X 20 WIDE FLG BUTT HD SS	12

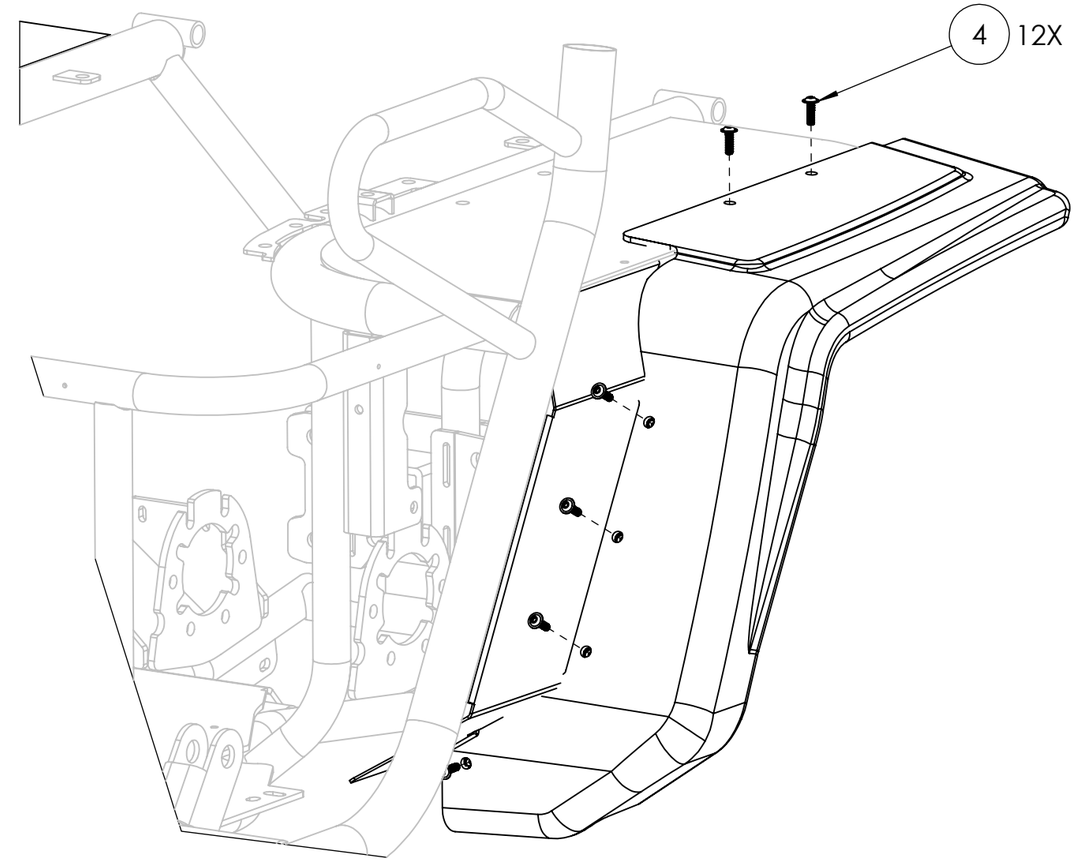

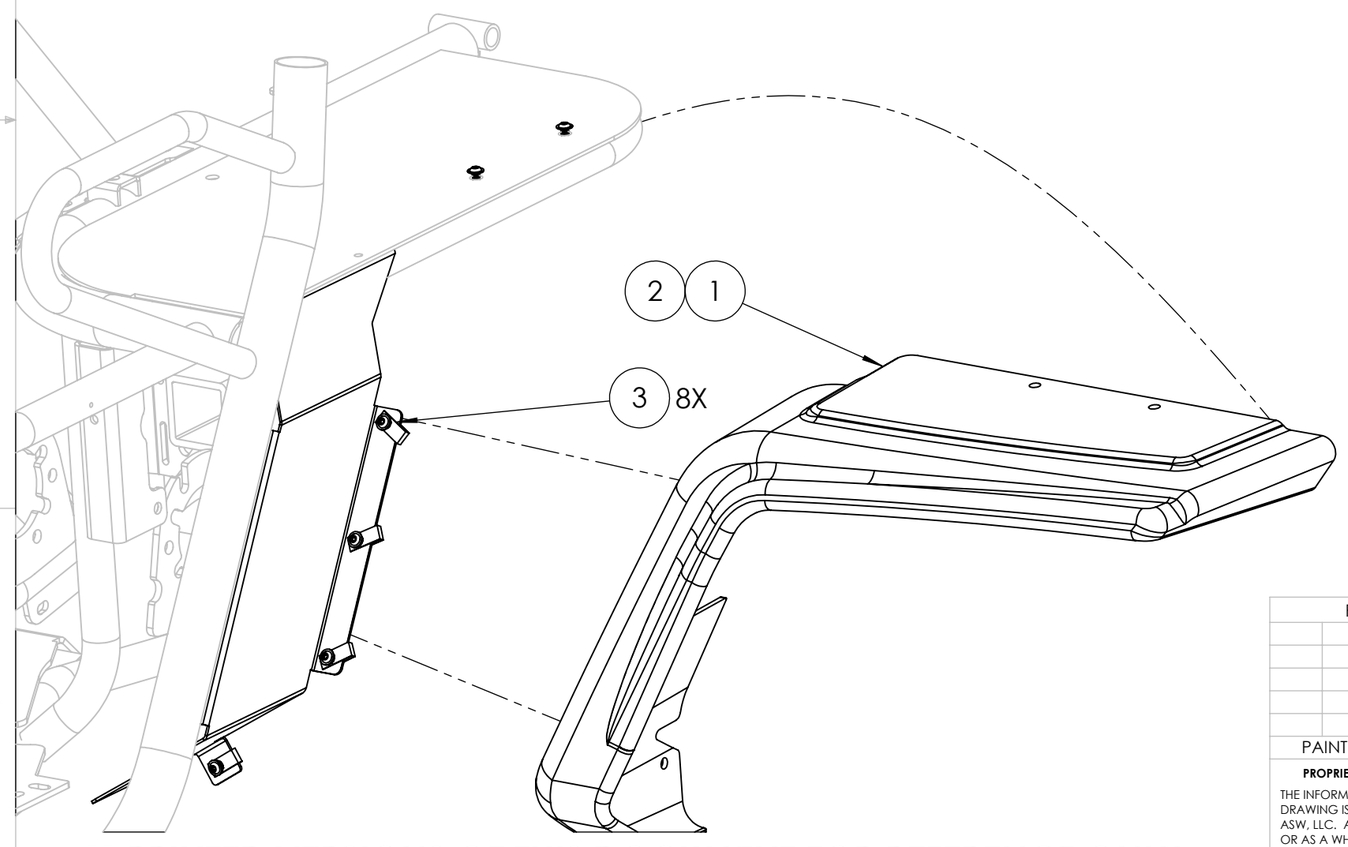

**** PRINTED VERSIONS OF THIS DOCUMENT FOR REFERENCE ONLY ****

PAINT TABLE
PAINT PER ALM STD 114

PROPRIETARY AND CONFIDENTIAL

THE INFORMATION CONTAINED IN THIS DRAWING IS THE SOLE PROPERTY OF ASW, LLC. ANY REPRODUCTION IN PART OR AS A WHOLE WITHOUT THE WRITTEN PERMISSION OF ASW, LLC IS PROHIBITED.

UNLESS OTHERWISE SPECIFIED:

DIMENSIONS ARE IN INCHES
TOLERANCES:
FRACTIONAL ± 1/16"
ANGULAR: MACH ± 1°
X.X ± 0.05
X.XX ± 0.01 TORQ ±10%
X.XXX ±0.005 BEND ± 2°

INTERPRET GEOMETRIC TOLERANCING PER:

MATERIAL

FINISH

DO NOT SCALE DRAWING

	NAME	DATE
DRAWN		
CHECKED		
ENG APPR.		
MFG APPR.		
Q.A.		

COMMENTS:

AMERICAN LANDMASTER

REAR FENDER ASSEMBLY

SIZE	DWG. NO.	REV
B	CA00076	0
SCALE: 1:5	WEIGHT:	SHEET 1 OF 1

ITEM NO.	PART NUMBER	DESCRIPTION	QTY.
1	15823	NUT, CLIP ON TAPPED - M6 X 1.0; 11 GA MA	4
2	14426	BOLT, M6 X 1.0 X 14	4
3	19580	BRKT, 4WD TUNNEL	1

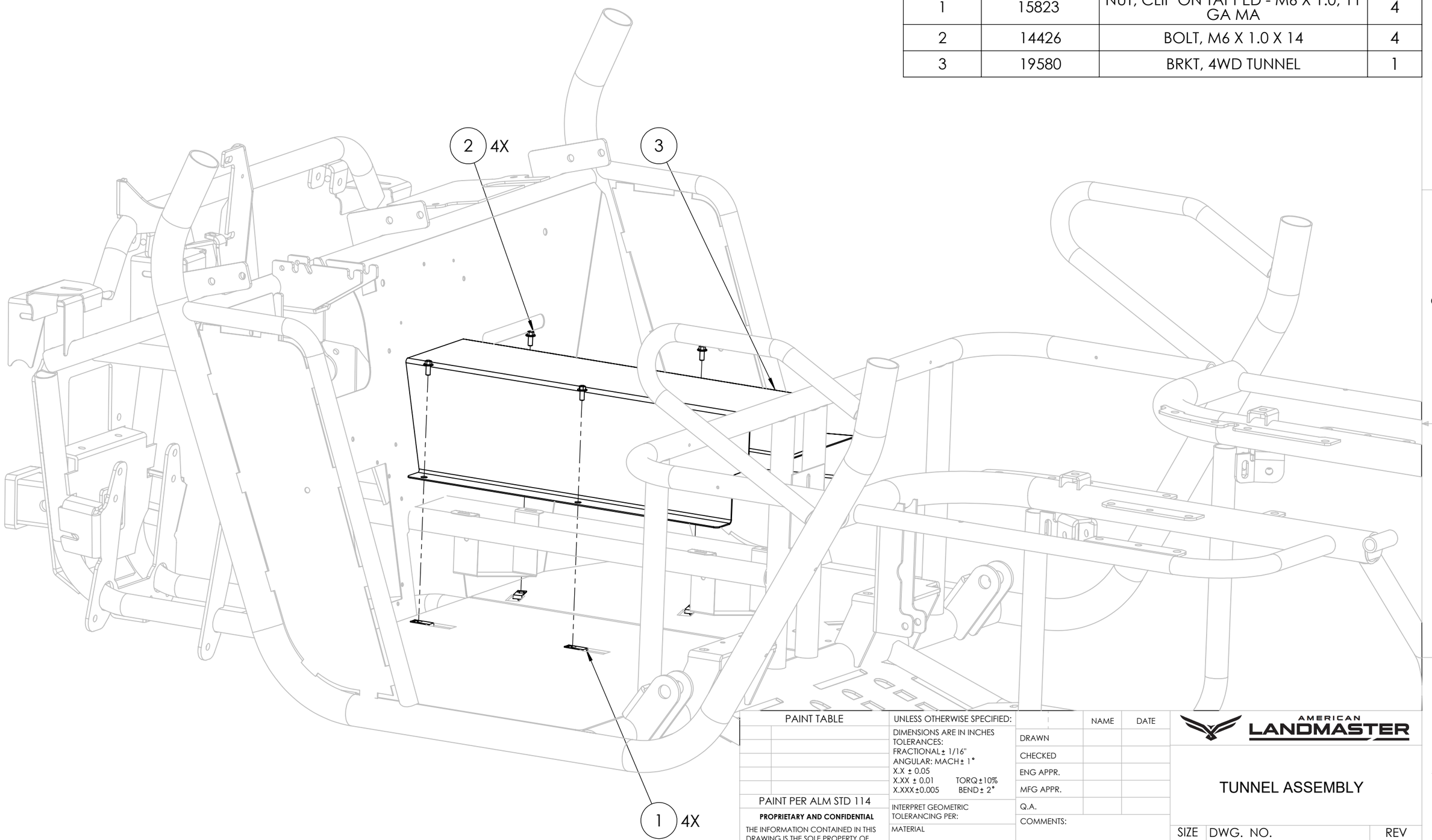

**** PRINTED VERSIONS OF THIS DOCUMENT FOR REFERENCE ONLY ****

PAINT TABLE

PAINT PER ALM STD 114

PROPRIETARY AND CONFIDENTIAL

THE INFORMATION CONTAINED IN THIS DRAWING IS THE SOLE PROPERTY OF ASW, LLC. ANY REPRODUCTION IN PART OR AS A WHOLE WITHOUT THE WRITTEN PERMISSION OF ASW, LLC IS PROHIBITED.

UNLESS OTHERWISE SPECIFIED:
DIMENSIONS ARE IN INCHES
TOLERANCES:
FRACTIONAL ± 1/16"
ANGULAR: MACH ± 1°
X.X ± 0.05
X.XX ± 0.01 TORQ ± 10%
X.XXX ± 0.005 BEND ± 2°

INTERPRET GEOMETRIC TOLERANCING PER:

MATERIAL

FINISH

DO NOT SCALE DRAWING

	NAME	DATE
DRAWN		
CHECKED		
ENG APPR.		
MFG APPR.		
Q.A.		

COMMENTS:

AMERICAN LANDMASTER

TUNNEL ASSEMBLY

SIZE	DWG. NO.	REV
B	CA00076	0

SCALE: 1:5 WEIGHT: SHEET 1 OF 1

ITEM NO.	PART NUMBER	DESCRIPTION	QTY.
1	CP00129	WDMT, STEEL BED - FLAT	1
2	CP00136	WDMT, BED REAR CORNER SUPPORT	1
3	CP00139	WDMT, STEEL BED SIDE - LH	1
4	CP00141	WDMT, STEEL BED SIDE - RH	1
5	CP00148	WDMT, STEEL BED TAILGATE	1
6	19018	BOLT, 3/8"-16 X 2.25" FLANGE HEAD BLACK GRADE 5	10
7	2-50208	BOLT, 3/8IN X 2-1/2IN HEX HEAD G5	4
8	2-50740	WASHER, 3/8IN USS FLAT WASHER	4
9	2-50085	BOLT, 1/4IN X 1-1/2IN HEX HEAD G5	4
10	2-50084	BOLT, 1/4"-20 x .75" BLK	4
11	2-50087	BOLT, 1/4"-20 X 1"	2
12	15106	NUT, 1/4-20 NYLOCK	6
13	2-50717	WASHER, 1/4IN SAE FLAT	4
14	18238	LATCH, SPRING BOLT RH	1
15	18239	LATCH, SPRING BOLT LH	1
16	2-18413	BED BUMPER 1.5 INCH (RUBBER)	2
17	CP00150	CAP, 1.00" x 1.50" x 14GA TUBE BLK	6
18	2-70241	RUBBER TUBE, BED LATCH COVER	2
19	CP00149	CABLE, TAILGATE	2
20	19972	DECAL, BED REAR, WHITE BIRD	1
21	2-70150	REFLECTOR-UTV #RE10RB (RED)-ADHESIVE BACK	2
22	19971	DECAL, BED SIDE, LANDMASTER	2

PAINT TABLE

PAINT PER ALM STD 114

PROPRIETARY AND CONFIDENTIAL

THE INFORMATION CONTAINED IN THIS DRAWING IS THE SOLE PROPERTY OF ASW, LLC. ANY REPRODUCTION IN PART OR AS A WHOLE WITHOUT THE WRITTEN PERMISSION OF ASW, LLC IS PROHIBITED.

UNLESS OTHERWISE SPECIFIED:
DIMENSIONS ARE IN INCHES
TOLERANCES:
FRACTIONAL ± 1/16"
ANGULAR: MACH ± 1°
X.X ± 0.05
X.XX ± 0.01 TORQ ±10%
X.XXX ±0.005 BEND ± 2°

INTERPRET GEOMETRIC TOLERANCING PER:

MATERIAL

FINISH

DO NOT SCALE DRAWING

	NAME	DATE
DRAWN		
CHECKED	XXX	
ENG APPR.		
MFG APPR.		
Q.A.		

◆ INDICATES CRITICAL DIMENSIONS

COMMENTS:

AMERICAN LANDMASTER

STEEL BED

SIZE	DWG. NO.	REV
B	CA00076	0

SCALE: 1:20 WEIGHT: SHEET 1 OF 3

**** PRINTED VERSIONS OF THIS DOCUMENT FOR REFERENCE ONLY ****

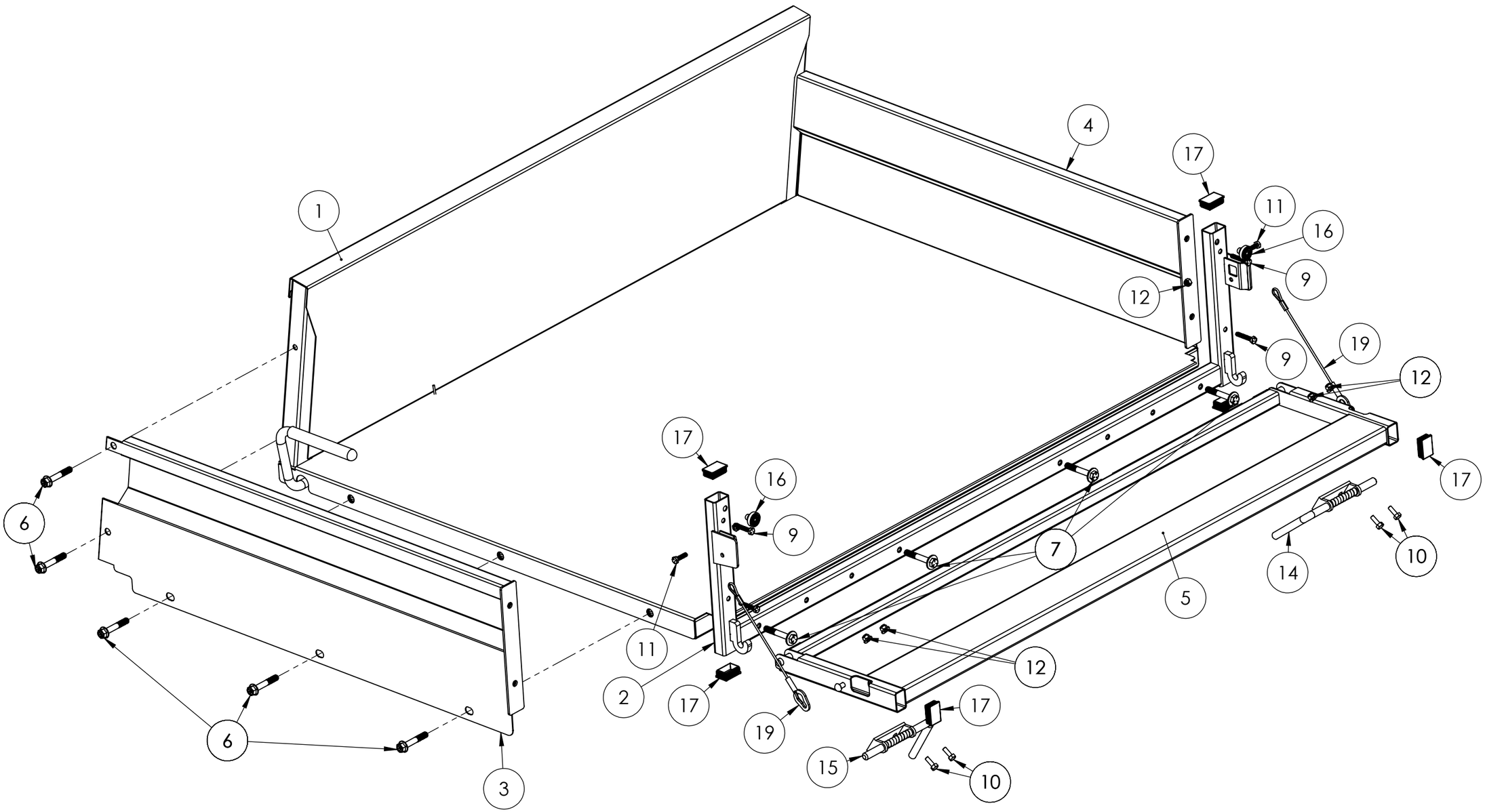

PAINT TABLE	
PAINT PER ALM STD 114	

PROPRIETARY AND CONFIDENTIAL

THE INFORMATION CONTAINED IN THIS DRAWING IS THE SOLE PROPERTY OF ASW, LLC. ANY REPRODUCTION IN PART OR AS A WHOLE WITHOUT THE WRITTEN PERMISSION OF ASW, LLC IS PROHIBITED.

UNLESS OTHERWISE SPECIFIED:

DIMENSIONS ARE IN INCHES
TOLERANCES:
FRACTIONAL ± 1/16"
ANGULAR: MACH ± 1°
X.X ± 0.05
X.XX ± 0.01 TORQ ±10%
X.XXX ±0.005 BEND ± 2°

INTERPRET GEOMETRIC TOLERANCING PER:

MATERIAL

FINISH

DO NOT SCALE DRAWING

	NAME	DATE
DRAWN		
CHECKED	XXX	
ENG APPR.		
MFG APPR.		
Q.A.		

◆ INDICATES CRITICAL DIMENSIONS

COMMENTS:

AMERICAN LANDMASTER

STEEL BED

SIZE	DWG. NO.	REV
B	CA00076	0
SCALE: 1:20	WEIGHT:	SHEET 2 OF 3

**** PRINTED VERSIONS OF THIS DOCUMENT FOR REFERENCE ONLY ****

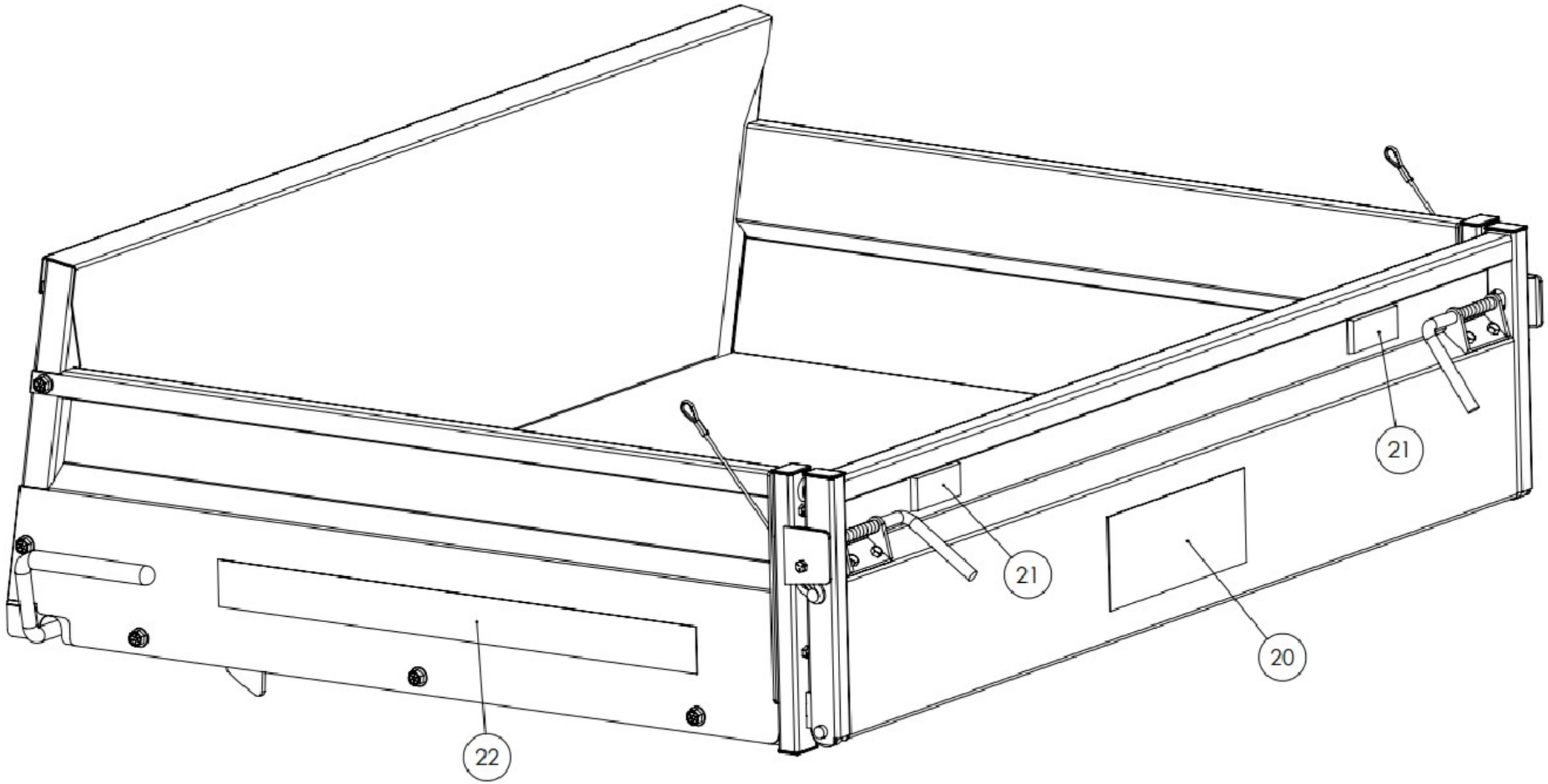

PAINT TABLE	
PAINT PER ALM STD 114	

PROPRIETARY AND CONFIDENTIAL

THE INFORMATION CONTAINED IN THIS DRAWING IS THE SOLE PROPERTY OF ASW, LLC. ANY REPRODUCTION IN PART OR AS A WHOLE WITHOUT THE WRITTEN PERMISSION OF ASW, LLC IS PROHIBITED.

UNLESS OTHERWISE SPECIFIED:

DIMENSIONS ARE IN INCHES
TOLERANCES:
FRACTIONAL ± 1/16"
ANGULAR: MACH ± 1°
X.X ± 0.05
X.XX ± 0.01 TORQ ±10%
X.XXX ±0.005 BEND ± 2°

INTERPRET GEOMETRIC TOLERANCING PER:

MATERIAL

FINISH

DO NOT SCALE DRAWING

	NAME	DATE
DRAWN		
CHECKED	XXX	
ENG APPR.		
MFG APPR.		
Q.A.		

◆ INDICATES CRITICAL DIMENSIONS

COMMENTS:

AMERICAN LANDMASTER

STEEL BED

SIZE	DWG. NO.	REV
B	CA00076	0
SCALE: 1:20	WEIGHT:	SHEET 3 OF 3

**** PRINTED VERSIONS OF THIS DOCUMENT FOR REFERENCE ONLY ****

ITEM NO.	PART NUMBER	DESCRIPTION	QTY.
1	2-50013	NUT, 3/8 KEPS	4
2	17660	PIN, BRIDGE .093 - ZINC	2
3	17661	PIN, CLEVIS - 5/8 X 3.50 CLEAR ZINC	2
4	2-50212	BOLT, 3/8IN X 3-1/4IN HEX HEAD G5-ZINC	2
5	2-50704	WASHER, 5/16IN USS FLAT	4
6	CA00059	BED, CONVERTIBLE STEEL BOX	1

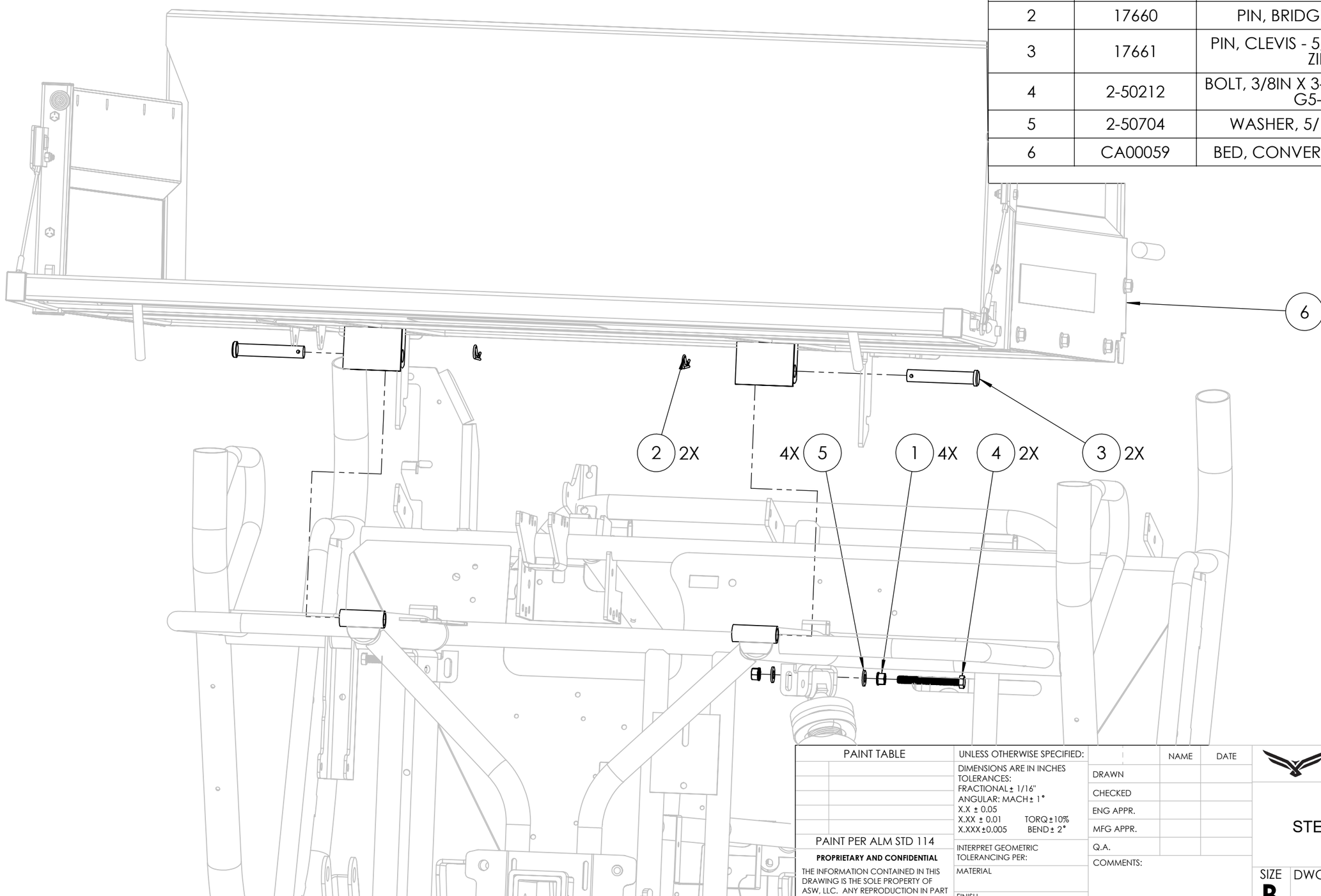

**** PRINTED VERSIONS OF THIS DOCUMENT FOR REFERENCE ONLY ****

PAINT TABLE

PAINT PER ALM STD 114

PROPRIETARY AND CONFIDENTIAL

THE INFORMATION CONTAINED IN THIS DRAWING IS THE SOLE PROPERTY OF ASW, LLC. ANY REPRODUCTION IN PART OR AS A WHOLE WITHOUT THE WRITTEN PERMISSION OF ASW, LLC IS PROHIBITED.

UNLESS OTHERWISE SPECIFIED:

DIMENSIONS ARE IN INCHES
TOLERANCES:
FRACTIONAL ± 1/16"
ANGULAR: MACH ± 1°
X.X ± 0.05
X.XX ± 0.01 TORQ ± 10%
X.XXX ± 0.005 BEND ± 2°

INTERPRET GEOMETRIC TOLERANCING PER:

MATERIAL

FINISH

DO NOT SCALE DRAWING

	NAME	DATE
DRAWN		
CHECKED		
ENG APPR.		
MFG APPR.		
Q.A.		

COMMENTS:

AMERICAN LANDMASTER

STEEL BED ASSEMBLY

SIZE	DWG. NO.	REV
B	CA00076	0

SCALE: 1:5 WEIGHT: SHEET 1 OF 1