LANDMASTER

ILLUSTRATED PARTS LIST

This Illustrated Parts List covers the following 2023 & 2024 model Landmaster made Utility Vehicles

L7 *(REPOWERED)*

4x4 GAS POWERED UTILITY VEHICLE

ITEM NO.	PART NUMBER	DESCRIPTION	QTY.
1	19947	PLATE, BACK CVT FRONT - L7	1
2	19952	ENGINE, VANGUARD 23EFI 25+	1
3	19953-2	BRKT, ENG MNT PLATE M38/M25	1
4	18130	PULLEY, DRIVER - PB - 700	1
5	2-50301	BOLT, 7/16IN X 3/4IN HEX HEAD G5	4
6	15823	NUT, CLIP ON TAPPED - M6 X 1.0; 11 GA MA	4
7	2-10190	KEYSTOCK, 3/16 X 1/4 X 1-1/2-CV TECH DRI	1
8	2-50167	BOLT, 5/16IN X 2IN HEX HEAD G5	4
9	16300	NUT, 5/16"-18 NYLON LOCK W/ FLANGE ZN	4
10	33U00001	SCREW, 3/8-24 X 5.00 HDFH	1

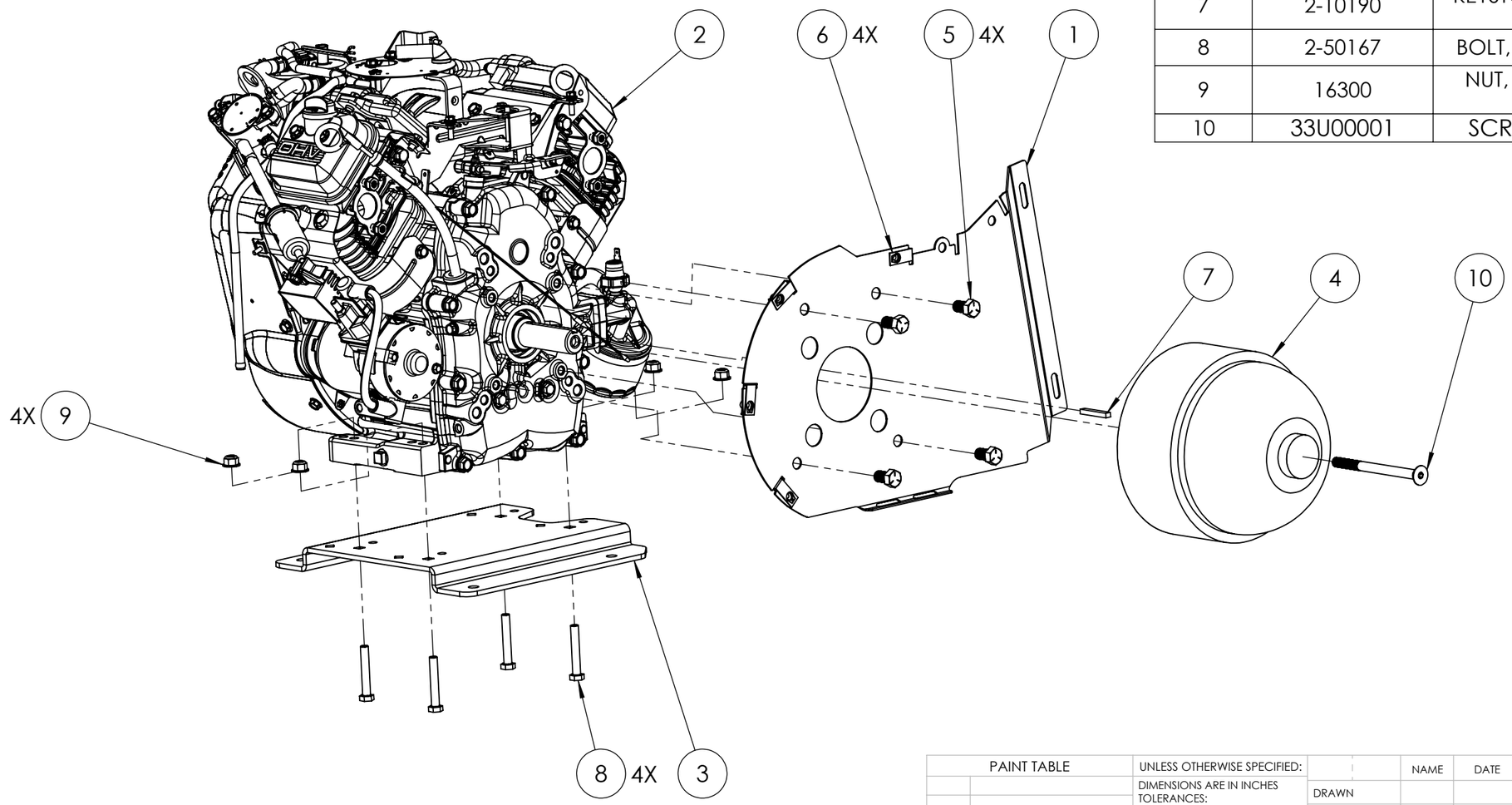

PAINT TABLE

PAINT PER ALM STD 114

PROPRIETARY AND CONFIDENTIAL

THE INFORMATION CONTAINED IN THIS DRAWING IS THE SOLE PROPERTY OF ASW, LLC. ANY REPRODUCTION IN PART OR AS A WHOLE WITHOUT THE WRITTEN PERMISSION OF ASW, LLC IS PROHIBITED.

UNLESS OTHERWISE SPECIFIED:

DIMENSIONS ARE IN INCHES
TOLERANCES:
FRACTIONAL ± 1/16"
ANGULAR: MACH ± 1°
X.X ± 0.05
X.XX ± 0.01 TORQ ± 10%
X.XXX ± 0.005 BEND ± 2°

INTERPRET GEOMETRIC TOLERANCING PER:

MATERIAL

FINISH

DO NOT SCALE DRAWING

	NAME	DATE
DRAWN		
CHECKED		
ENG APPR.		
MFG APPR.		
Q.A.		

COMMENTS:

AMERICAN LANDMASTER

MOTOR ASSEMBLY 1

SIZE	DWG. NO.	REV
B	CA00026	0

SCALE: 1:5 WEIGHT: SHEET 1 OF 1

**** PRINTED VERSIONS OF THIS DOCUMENT FOR REFERENCE ONLY ****

ITEM NO.	PART NUMBER	DESCRIPTION	QTY.
1	19952	ENGINE, VANGUARD 23EFI 25+	1
2	2-50215	BOLT, 3/8IN X 1-1/4IN HEX HEAD G5	4
3	19019	NUT, 3/8-16 SS FHH	4

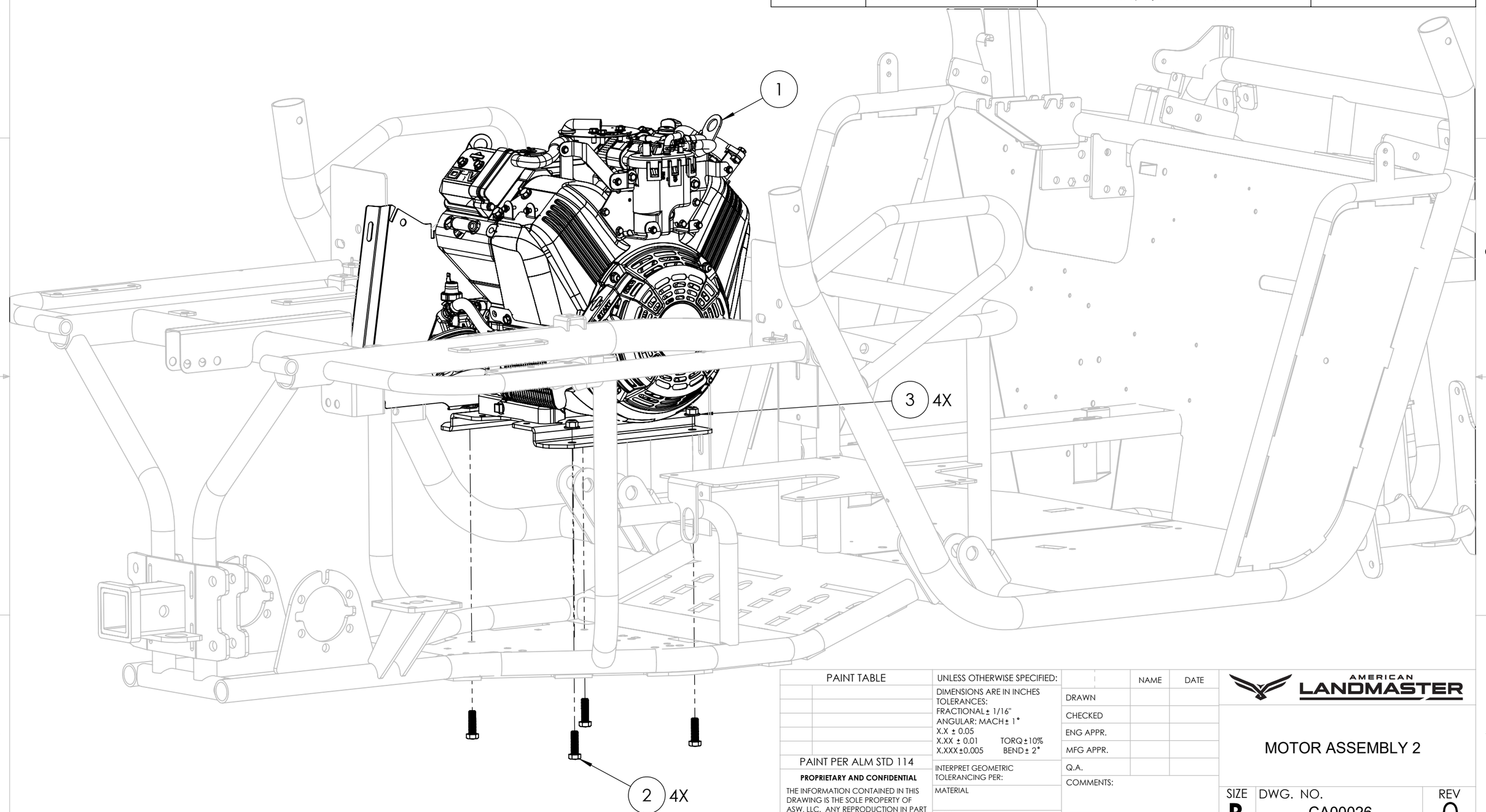

**** PRINTED VERSIONS OF THIS DOCUMENT FOR REFERENCE ONLY ****

PAINT TABLE

PAINT PER ALM STD 114

PROPRIETARY AND CONFIDENTIAL

THE INFORMATION CONTAINED IN THIS DRAWING IS THE SOLE PROPERTY OF ASW, LLC. ANY REPRODUCTION IN PART OR AS A WHOLE WITHOUT THE WRITTEN PERMISSION OF ASW, LLC IS PROHIBITED.

UNLESS OTHERWISE SPECIFIED:

DIMENSIONS ARE IN INCHES
TOLERANCES:
FRACTIONAL ± 1/16"
ANGULAR: MACH ± 1°
X.X ± 0.05
X.XX ± 0.01 TORQ ±10%
X.XXX ±0.005 BEND ± 2°

INTERPRET GEOMETRIC TOLERANCING PER:

MATERIAL

FINISH

DO NOT SCALE DRAWING

	NAME	DATE
DRAWN		
CHECKED		
ENG APPR.		
MFG APPR.		
Q.A.		

COMMENTS:

AMERICAN LANDMASTER

MOTOR ASSEMBLY 2

SIZE	DWG. NO.	REV
B	CA00026	0

SCALE: 1:5 WEIGHT: SHEET 1 OF 1

ITEM NO.	PART NUMBER	DESCRIPTION	QTY.
1	18132	BELT, PB - 700	1
2	14426	BOLT, M6 X 1.0 X 14	4
3	19959	COVER CVT FRONT - L7	1

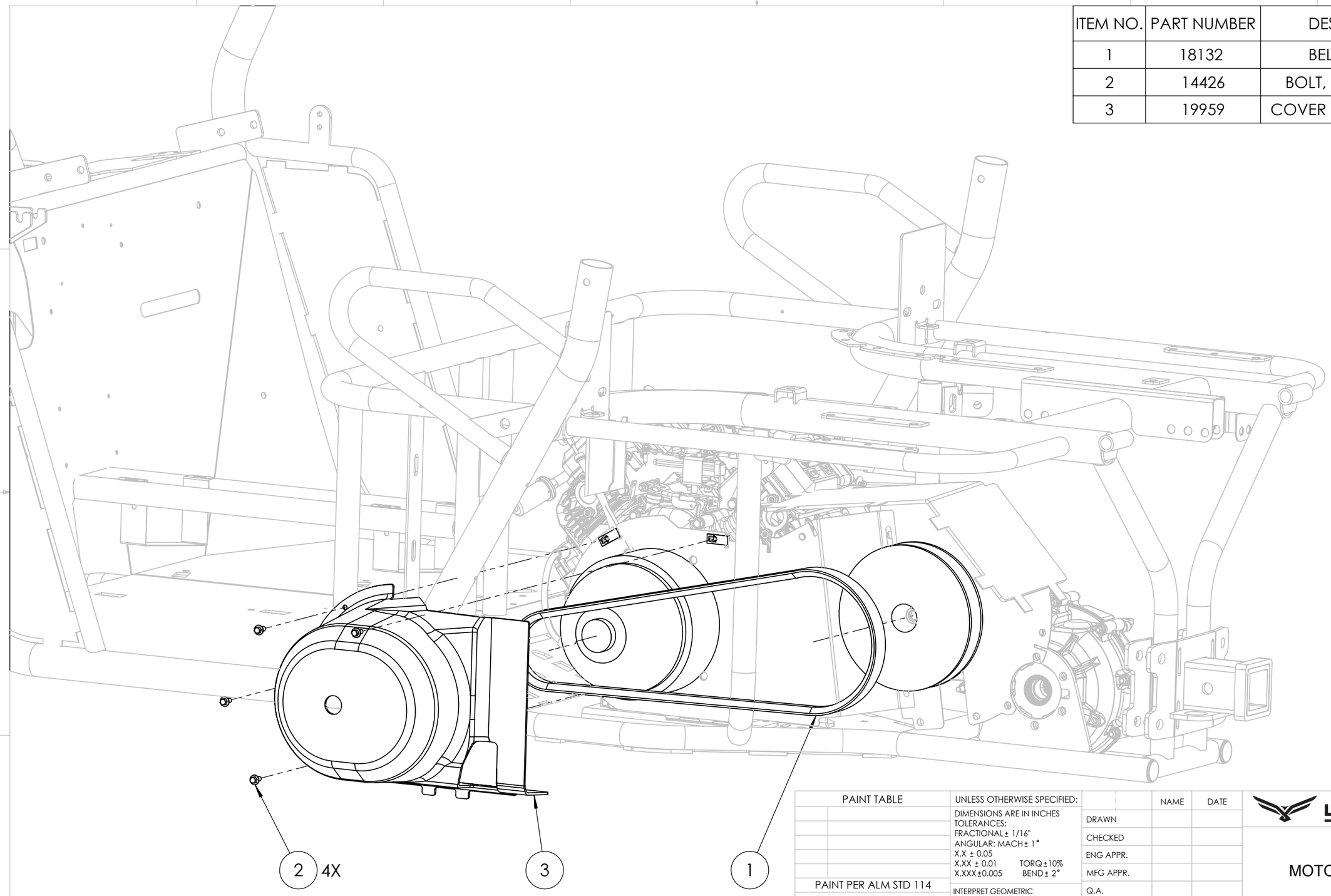

PAINT TABLE

PAINT PER ALM STD 114

PROPRIETARY AND CONFIDENTIAL

THE INFORMATION CONTAINED IN THIS DRAWING IS THE SOLE PROPERTY OF ASW, LLC. ANY REPRODUCTION IN PART OR AS A WHOLE WITHOUT THE WRITTEN PERMISSION OF ASW, LLC IS PROHIBITED.

UNLESS OTHERWISE SPECIFIED:
DIMENSIONS ARE IN INCHES
TOLERANCES:
FRACTIONAL ± 1/16"
ANGULAR: MACH ± 1°
X.X ± 0.05
X.XX ± 0.01 TORQ ± 10%
X.XXX ± 0.005 BEND ± 2°

INTERPRET GEOMETRIC TOLERANCING PER:

MATERIAL

FINISH

DO NOT SCALE DRAWING

	NAME	DATE
DRAWN		
CHECKED		
ENG APPR.		
MFG APPR.		
Q.A.		

COMMENTS:

AMERICAN LANDMASTER

MOTOR ASSEMBLY 3

SIZE	DWG. NO.	REV
B	CA00026	0

SCALE: 1:5 WEIGHT: SHEET 1 OF 1

**** PRINTED VERSIONS OF THIS DOCUMENT FOR REFERENCE ONLY ****

ITEM NO.	PART NUMBER	DESCRIPTION	QTY.
1	18058	AXLE, TRANSAXLE IRS 10.15:1	1
2	16830	SPACER, TRANSAXLE SHIFTER INPUT	1
3	15823	NUT, CLIP ON TAPPED - M6 X 1.0; 11 GA MA	8
4	16868	NUT, M12 X 1.25 INTERFERENCE TOP LOCK	1
5	19326-2	PLATE, BACK CVT REAR - RAW	1
6	19518	BOLT, 3/8-16 X 2.75 G5 HHCS ZN BLUE PATCHLOCK	6
7	19519	BOLT, 3/8-16 X 1 HEX HEAD G5	5
8	16623	BRACKET, SHIFTER INPUT	1
9	18697	CAP, ID .96" - 1.07" SNAP IN	2

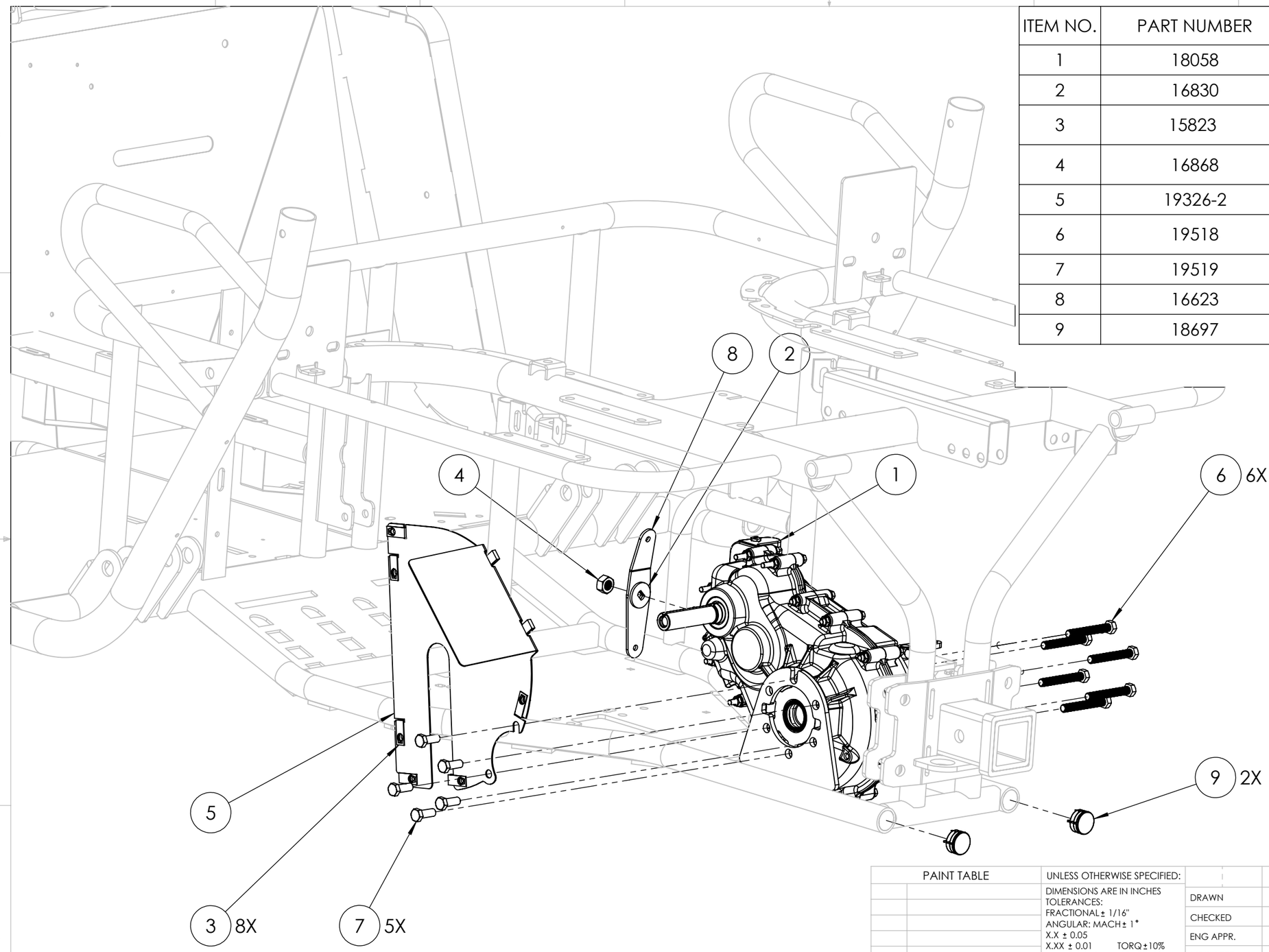

PAINT TABLE

PAINT PER ALM STD 114

PROPRIETARY AND CONFIDENTIAL

THE INFORMATION CONTAINED IN THIS DRAWING IS THE SOLE PROPERTY OF ASW, LLC. ANY REPRODUCTION IN PART OR AS A WHOLE WITHOUT THE WRITTEN PERMISSION OF ASW, LLC IS PROHIBITED.

UNLESS OTHERWISE SPECIFIED:

DIMENSIONS ARE IN INCHES
TOLERANCES:
FRACTIONAL ± 1/16"
ANGULAR: MACH ± 1°
X.X ± 0.05
X.XX ± 0.01 TORQ ±10%
X.XXX ±0.005 BEND ± 2°

INTERPRET GEOMETRIC TOLERANCING PER:

MATERIAL

FINISH

DO NOT SCALE DRAWING

	NAME	DATE
DRAWN		
CHECKED		
ENG APPR.		
MFG APPR.		
Q.A.		

COMMENTS:

AMERICAN LANDMASTER

TRANSAXLE ASSEMBLY 1

SIZE	DWG. NO.	REV
B	CA00026	0

SCALE: 1:5 WEIGHT: SHEET 1 OF 1

**** PRINTED VERSIONS OF THIS DOCUMENT FOR REFERENCE ONLY ****

ITEM NO.	PART NUMBER	DESCRIPTION	QTY.
1	18123	BRKT, DIFF LOCK 4WD	1
2	2-50100	BOLT, SERRATED 5/16" - 18 X 3/4"	2

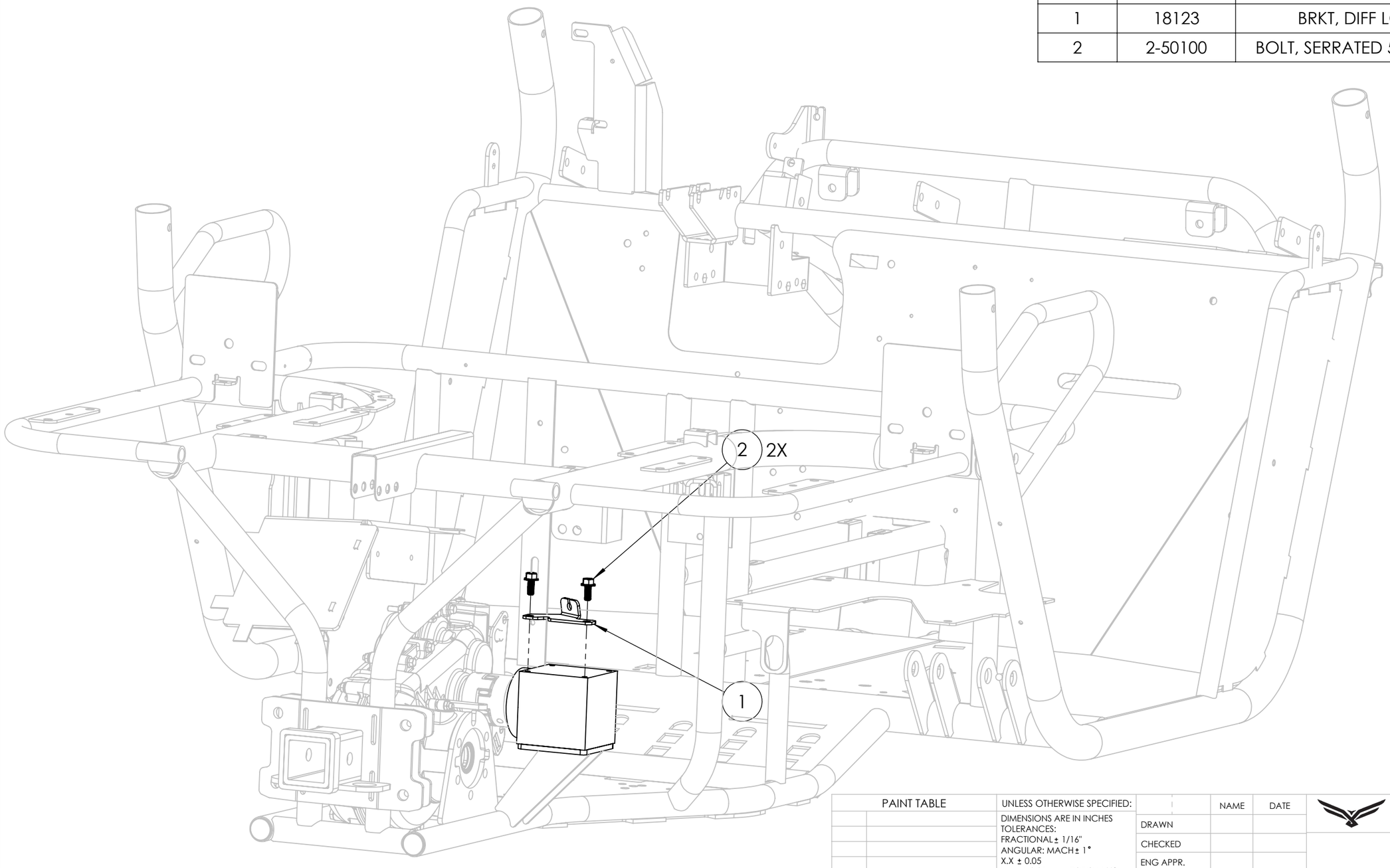

PAINT TABLE

PAINT PER ALM STD 114

PROPRIETARY AND CONFIDENTIAL

THE INFORMATION CONTAINED IN THIS DRAWING IS THE SOLE PROPERTY OF ASW, LLC. ANY REPRODUCTION IN PART OR AS A WHOLE WITHOUT THE WRITTEN PERMISSION OF ASW, LLC IS PROHIBITED.

UNLESS OTHERWISE SPECIFIED:

DIMENSIONS ARE IN INCHES
TOLERANCES:
FRACTIONAL ± 1/16"
ANGULAR: MACH ± 1°
X.X ± 0.05
X.XX ± 0.01 TORQ ±10%
X.XXX ±0.005 BEND ± 2°

INTERPRET GEOMETRIC TOLERANCING PER:

MATERIAL

FINISH

DO NOT SCALE DRAWING

	NAME	DATE
DRAWN		
CHECKED		
ENG APPR.		
MFG APPR.		
Q.A.		

COMMENTS:

AMERICAN LANDMASTER

TRANSAXLE ASSEMBLY 2

SIZE	DWG. NO.	REV
B	CA00026	0

SCALE: 1:5 WEIGHT: SHEET 1 OF 1

**** PRINTED VERSIONS OF THIS DOCUMENT FOR REFERENCE ONLY ****

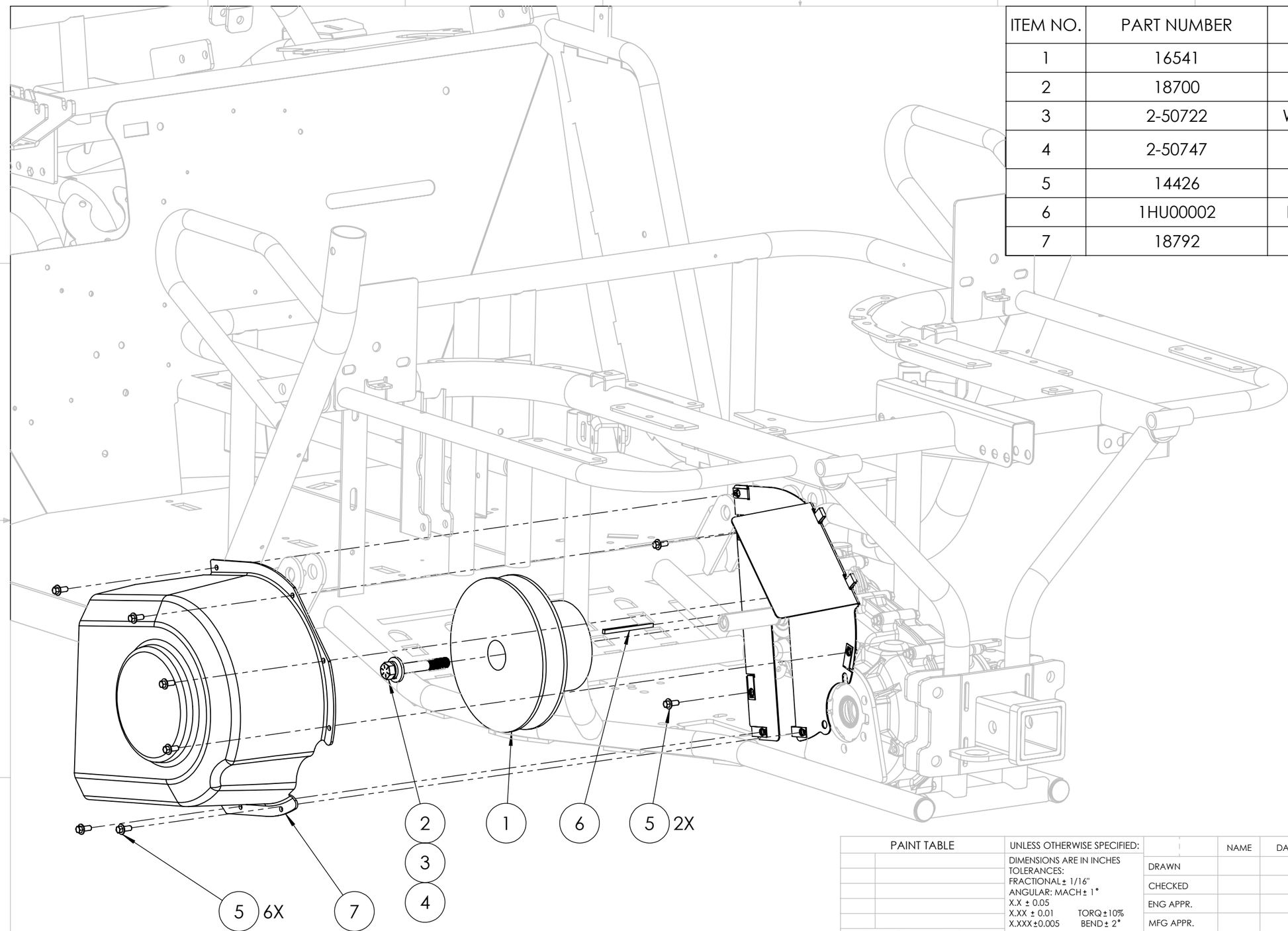

ITEM NO.	PART NUMBER	DESCRIPTION	QTY.
1	16541	PULLEY, DRIVEN - PB - 700	1
2	18700	BOLT, 1/2-20 X 3.5"	1
3	2-50722	WASHER, 1/2IN LOCK WASHER	1
4	2-50747	WASHER, 0.515IN X 1.25IN X 0.125IN	1
5	14426	BOLT, M6 X 1.0 X 14	8
6	1HU00002	KEYSTOCK. 3/16 X 3/16 X 3.00	1
7	18792	COVER, CVT REAR - L7	1

PAINT TABLE

PAINT PER ALM STD 114

PROPRIETARY AND CONFIDENTIAL

THE INFORMATION CONTAINED IN THIS DRAWING IS THE SOLE PROPERTY OF ASW, LLC. ANY REPRODUCTION IN PART OR AS A WHOLE WITHOUT THE WRITTEN PERMISSION OF ASW, LLC IS PROHIBITED.

UNLESS OTHERWISE SPECIFIED:

DIMENSIONS ARE IN INCHES
TOLERANCES:
FRACTIONAL ± 1/16"
ANGULAR: MACH ± 1°
X.X ± 0.05
X.XX ± 0.01 TORQ ±10%
X.XXX ±0.005 BEND ± 2°

INTERPRET GEOMETRIC TOLERANCING PER:

MATERIAL

FINISH

DO NOT SCALE DRAWING

	NAME	DATE
DRAWN		
CHECKED		
ENG APPR.		
MFG APPR.		
Q.A.		

COMMENTS:

AMERICAN LANDMASTER

TRANSAXLE ASSEMBLY 3

SIZE	DWG. NO.	REV
B	CA00026	0

SCALE: 1:5 WEIGHT: SHEET 1 OF 1

**** PRINTED VERSIONS OF THIS DOCUMENT FOR REFERENCE ONLY ****

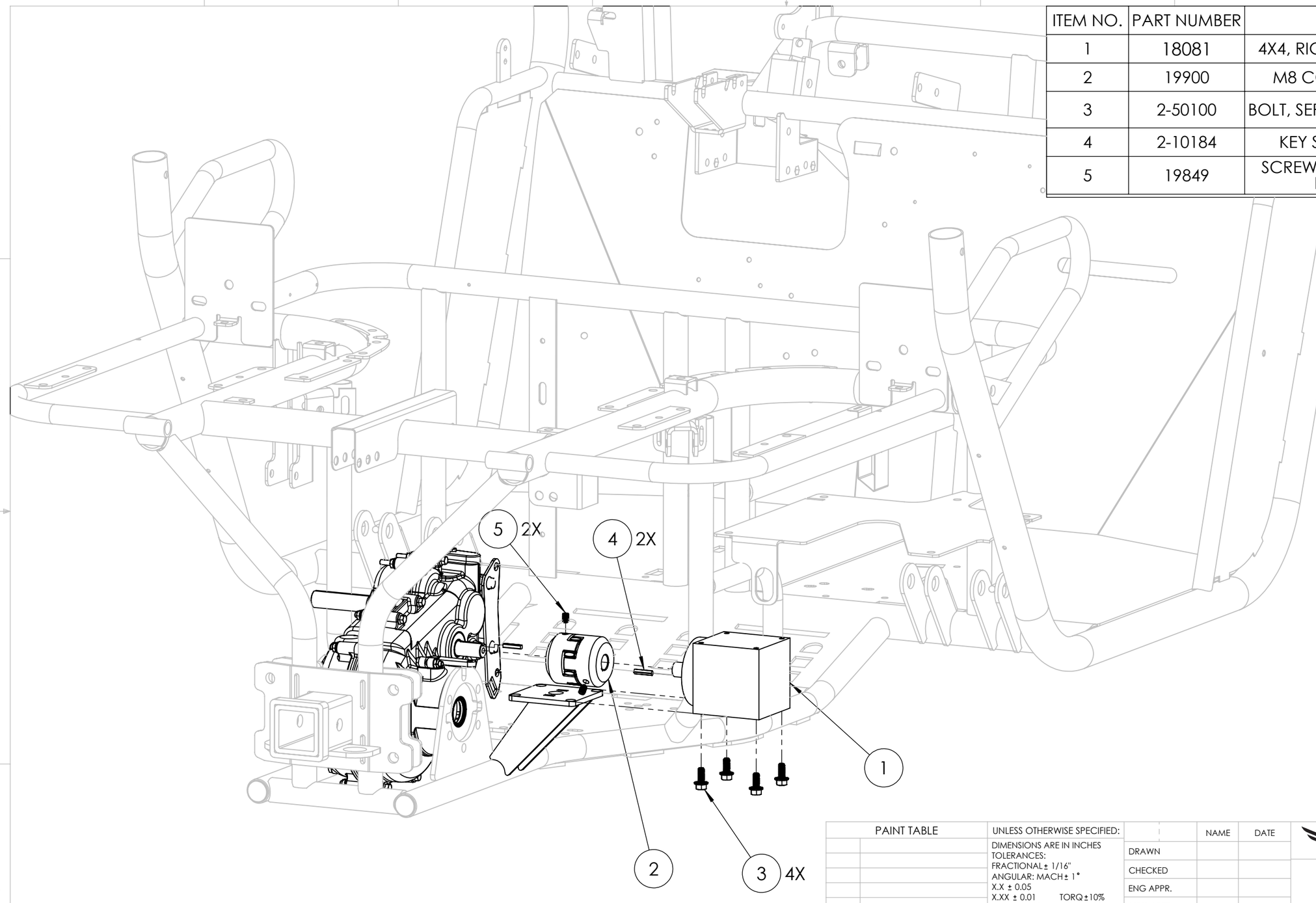

ITEM NO.	PART NUMBER	DESCRIPTION	QTY.
1	18081	4X4, RIGHT ANGLE GEAR BOX	1
2	19900	M8 COUPLER, 4 JAW ASM	1
3	2-50100	BOLT, SERRATED 5/16" - 18 X 3/4"	4
4	2-10184	KEY STOCK, 3/16IN X 1IN	2
5	19849	SCREW, M8 X 1.25 X 12 SET C PNT PATCHLOK	2

PAINT TABLE

PAINT PER ALM STD 114

PROPRIETARY AND CONFIDENTIAL

THE INFORMATION CONTAINED IN THIS DRAWING IS THE SOLE PROPERTY OF ASW, LLC. ANY REPRODUCTION IN PART OR AS A WHOLE WITHOUT THE WRITTEN PERMISSION OF ASW, LLC IS PROHIBITED.

UNLESS OTHERWISE SPECIFIED:

DIMENSIONS ARE IN INCHES
TOLERANCES:
FRACTIONAL ± 1/16"
ANGULAR: MACH ± 1°
X.X ± 0.05
X.XX ± 0.01 TORQ ± 10%
X.XXX ± 0.005 BEND ± 2°

INTERPRET GEOMETRIC TOLERANCING PER:

MATERIAL

FINISH

DO NOT SCALE DRAWING

	NAME	DATE
DRAWN		
CHECKED		
ENG APPR.		
MFG APPR.		
Q.A.		

COMMENTS:

AMERICAN LANDMASTER

TRANSAXLE ASSEMBLY 4

SIZE	DWG. NO.	REV
B	CA00026	0

SCALE: 1:5 WEIGHT: SHEET 1 OF 1

**** PRINTED VERSIONS OF THIS DOCUMENT FOR REFERENCE ONLY ****

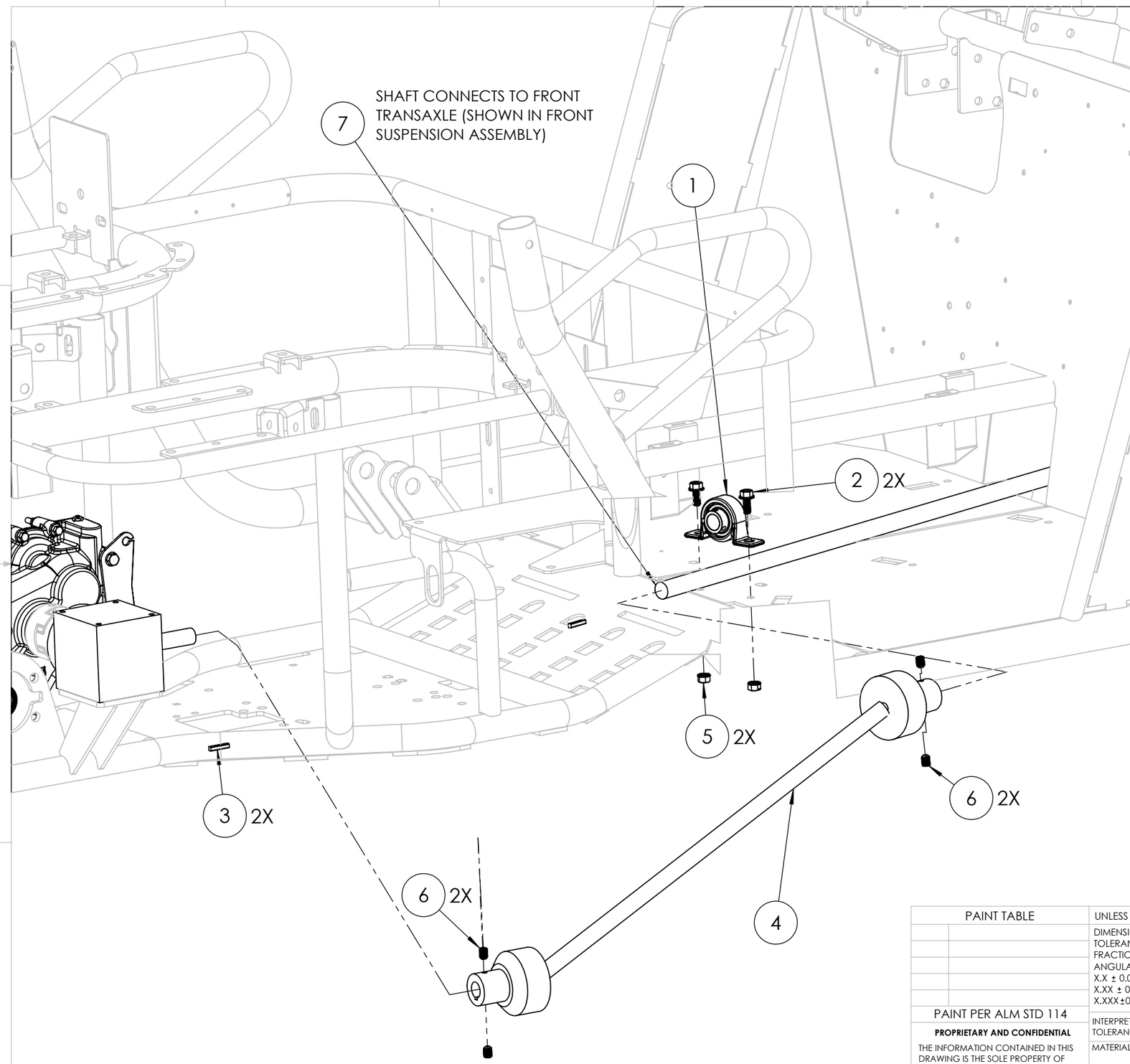

ITEM NO.	PART NUMBER	DESCRIPTION	QTY.
1	2-25010	4X4, DRIVE SHAFT BEARING-PILLOW BLOCK ST	1
2	2-50100	BOLT, SERRATED 5/16" - 18 X 3/4"	2
3	2-10184	KEY STOCK, 3/16IN X 1IN	2
4	2-25016	4X4, CV DRIVE SHAFT -REAR (SEE SPECS) -PAPRS-35002S	1
5	2-50005	NUT, 5/16-18 KEPS	2
6	19005	SCREW, SET 3/8-16 X 0.50 CUP POINT / PATCH LOK	4
7	16430	SHAFT, CV DRIVE - FRONT 36.5" OAL	1

**** PRINTED VERSIONS OF THIS DOCUMENT FOR REFERENCE ONLY ****

PAINT TABLE

PAINT PER ALM STD 114

PROPRIETARY AND CONFIDENTIAL

THE INFORMATION CONTAINED IN THIS DRAWING IS THE SOLE PROPERTY OF ASW, LLC. ANY REPRODUCTION IN PART OR AS A WHOLE WITHOUT THE WRITTEN PERMISSION OF ASW, LLC IS PROHIBITED.

UNLESS OTHERWISE SPECIFIED:

DIMENSIONS ARE IN INCHES
TOLERANCES:
FRACTIONAL ± 1/16"
ANGULAR: MACH ± 1°
X.X ± 0.05
X.XX ± 0.01 TORQ ± 10%
X.XXX ± 0.005 BEND ± 2°

INTERPRET GEOMETRIC TOLERANCING PER:

MATERIAL

FINISH

DO NOT SCALE DRAWING

	NAME	DATE
DRAWN		
CHECKED		
ENG APPR.		
MFG APPR.		
Q.A.		

COMMENTS:

AMERICAN LANDMASTER

TRANSAXLE ASSEMBLY 5

SIZE	DWG. NO.	REV
B	CA00026	0

SCALE: 1:5 WEIGHT: SHEET 1 OF 1

ITEM NO.	PART NUMBER	DESCRIPTION	QTY.
1	19950	EXHAUST, HEADER M38 W/CAT	1
2	18326	MUFFLER - L SERIES V TWIN	1
3	18329	ISOLATOR, EXHAUST HANGER	3
4	19431	PIN, 7/16 X 2.5 CLEVIS - ZN	3
5	19432	Bow Tie Cotter Pins	3
6	2-50740	WASHER, 3/8IN USS FLAT WASHER	2

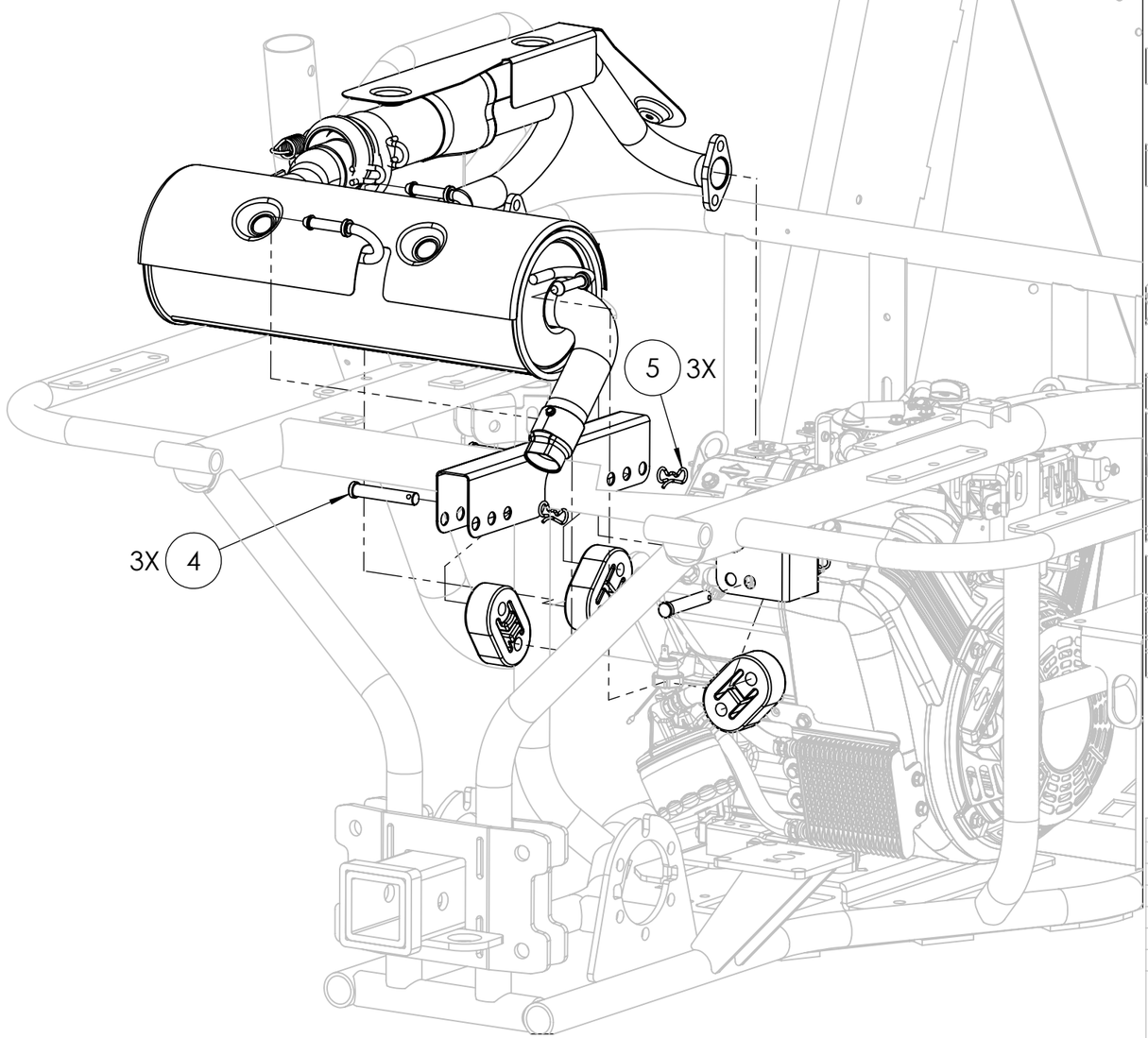

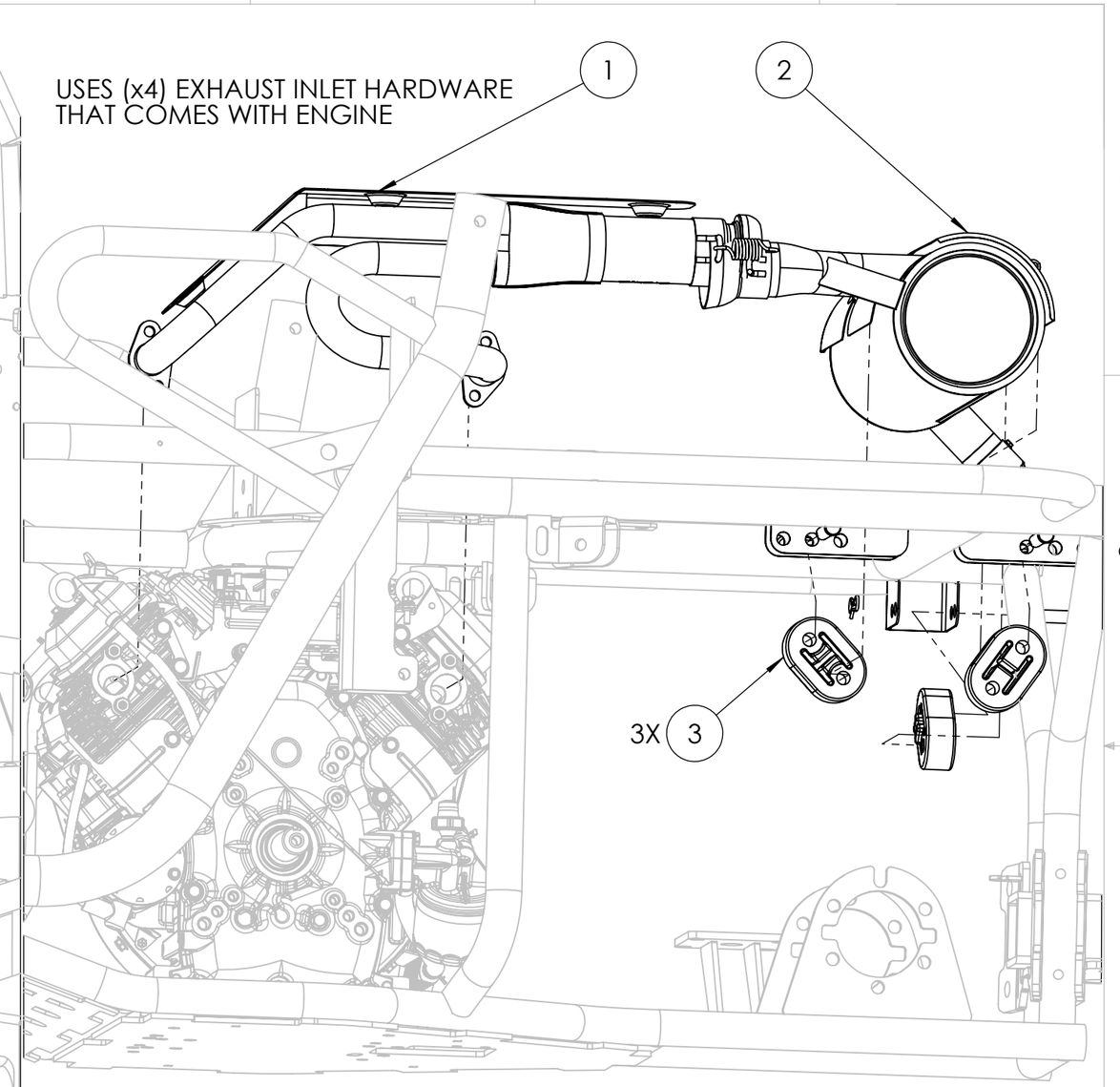

**** PRINTED VERSIONS OF THIS DOCUMENT FOR REFERENCE ONLY ****

PAINT TABLE

PAINT PER ALM STD 114

PROPRIETARY AND CONFIDENTIAL

THE INFORMATION CONTAINED IN THIS DRAWING IS THE SOLE PROPERTY OF ASW, LLC. ANY REPRODUCTION IN PART OR AS A WHOLE WITHOUT THE WRITTEN PERMISSION OF ASW, LLC IS PROHIBITED.

UNLESS OTHERWISE SPECIFIED:
DIMENSIONS ARE IN INCHES
TOLERANCES:
FRACTIONAL ± 1/16"
ANGULAR: MACH ± 1°
X.X ± 0.05
X.XX ± 0.01 TORQ ±10%
X.XXX ±0.005 BEND ± 2°

INTERPRET GEOMETRIC TOLERANCING PER:

MATERIAL

FINISH

DO NOT SCALE DRAWING

	NAME	DATE
DRAWN		
CHECKED		
ENG APPR.		
MFG APPR.		
Q.A.		

COMMENTS:

AMERICAN LANDMASTER

EXHAUST ASSEMBLY

SIZE	DWG. NO.	REV
B	CA00026	0

SCALE: 1:5 WEIGHT: SHEET 1 OF 1

ITEM NO.	PART NUMBER	DESCRIPTION	QTY.
1	17801	STRAP, FUEL TANK	2
2	18772	TANK, FUEL FLAM FRNT GAUGE BLK	1
3	15823	NUT, CLIP ON TAPPED - M6 X 1.0; 11 GA MA	4
4	14426	BOLT, M6 X 1.0 X 14	4

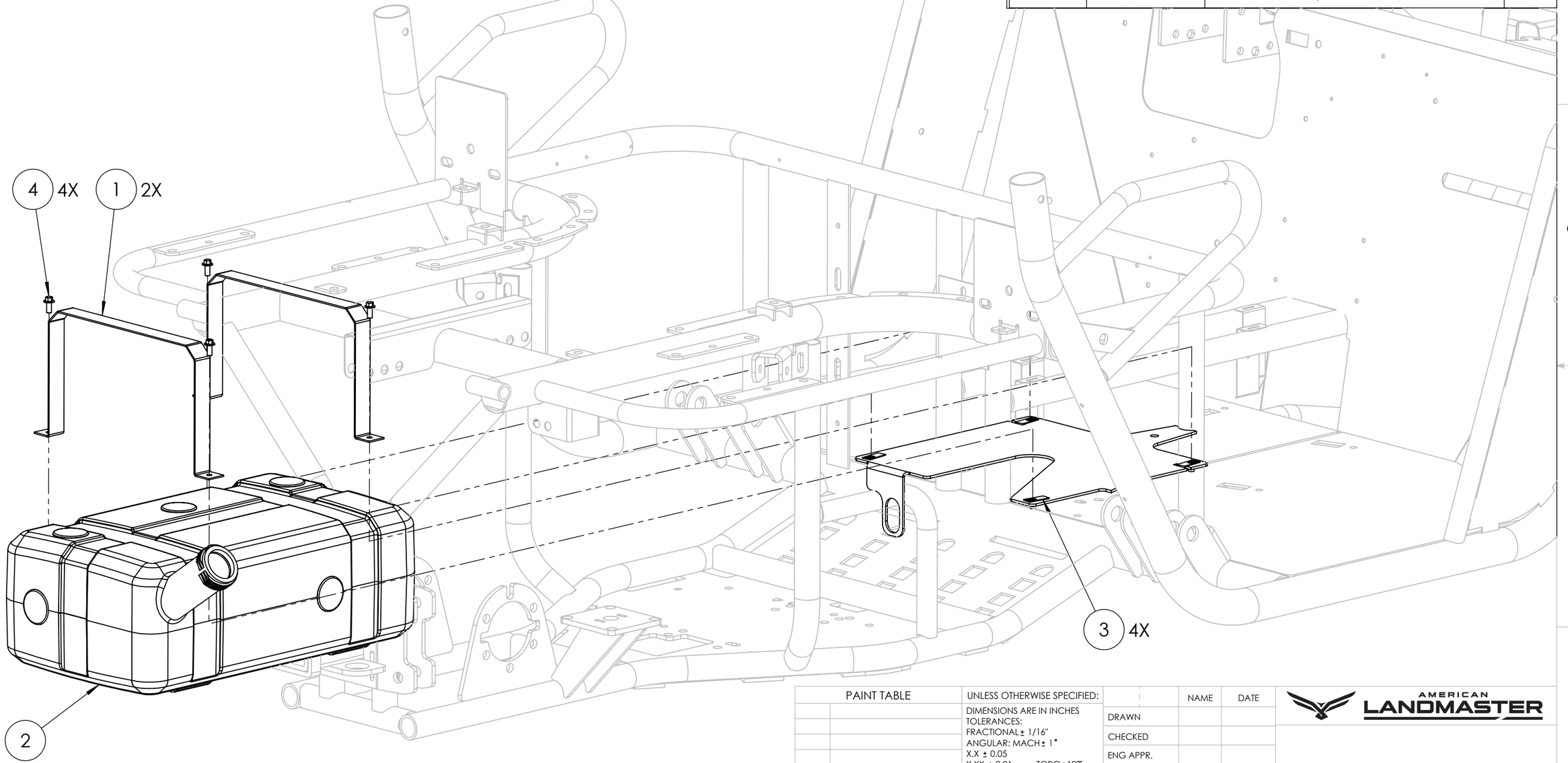

PAINT TABLE

PAINT PER ALM STD 114

PROPRIETARY AND CONFIDENTIAL

THE INFORMATION CONTAINED IN THIS DRAWING IS THE SOLE PROPERTY OF ASW, LLC. ANY REPRODUCTION IN PART OR AS A WHOLE WITHOUT THE WRITTEN PERMISSION OF ASW, LLC IS PROHIBITED.

UNLESS OTHERWISE SPECIFIED:

DIMENSIONS ARE IN INCHES
TOLERANCES:
FRACTIONAL ± 1/16"
ANGULAR: MACH ± 1°
X.X ± 0.05
X.XX ± 0.01 TORQ ±10%
X.XXX ±0.005 BEND ± 2°

INTERPRET GEOMETRIC TOLERANCING PER:

MATERIAL

FINISH

DO NOT SCALE DRAWING

	NAME	DATE
DRAWN		
CHECKED		
ENG APPR.		
MFG APPR.		
Q.A.		

COMMENTS:

AMERICAN LANDMASTER

FUEL TANK ASSEMBLY

SIZE	DWG. NO.	REV
B	CA00026	0

SCALE: 1:5 WEIGHT: SHEET 1 OF 1

**** PRINTED VERSIONS OF THIS DOCUMENT FOR REFERENCE ONLY ****

ITEM NO.	PART NUMBER	DESCRIPTION	QTY.
1	18594	ASM, REAR CORNER MODULE	1
2	2-11124	BRAKE CALIPER-RAZORBACK (99-22664)	1
3	2-11168	BRAKE MOUNT PINS-RAZORBACK (05-17221)	2
4	2-11169	BRAKE, RETAINING CLIPS-SMALL-RAZORBACK	2
5	2-11167	BRAKE PADS-RAZORBACK, TYPE 98 (33-23194)	2
6	19516	SPRING, .75" LONG X .5 OD X 0.376" ID	2

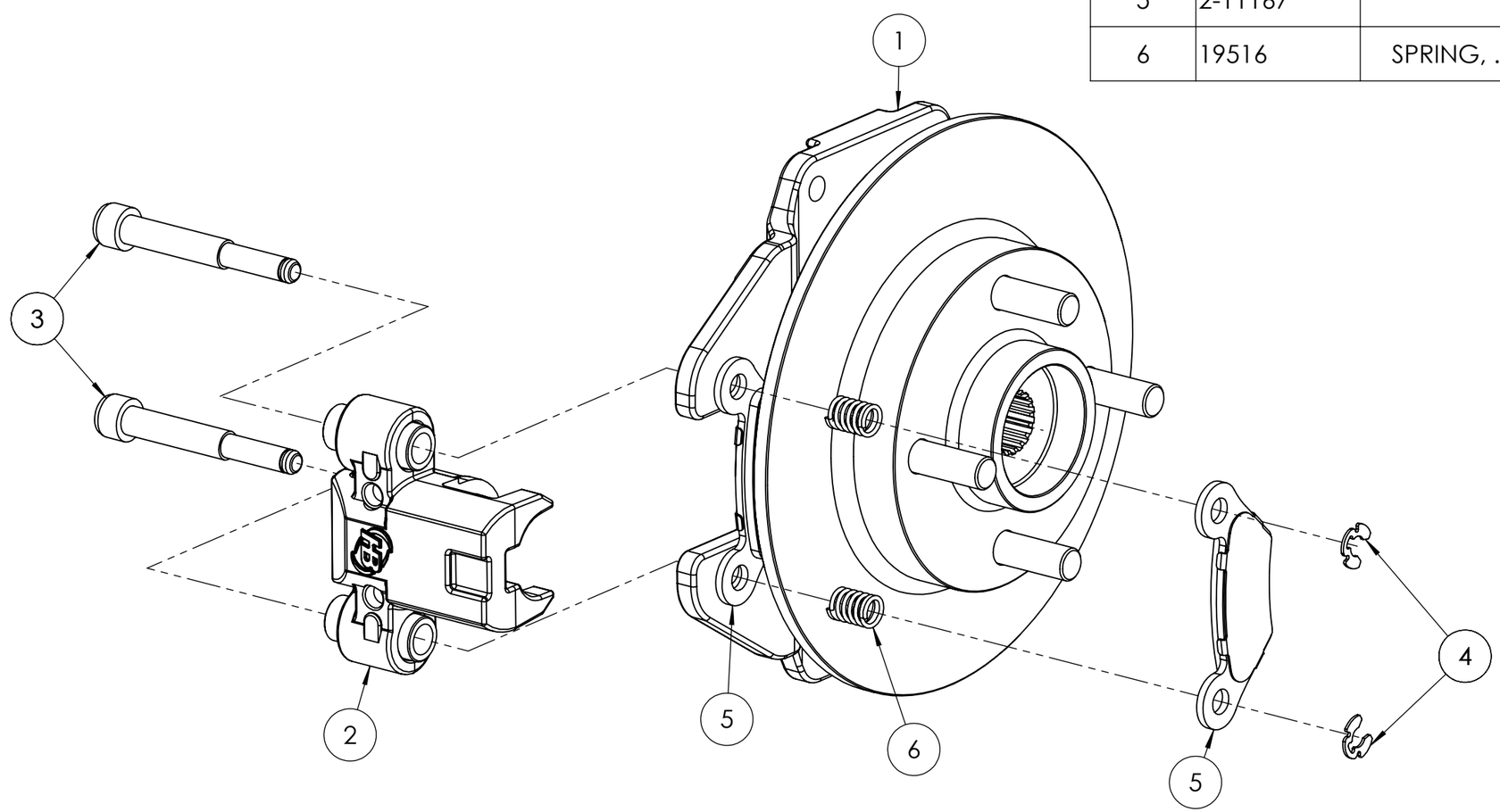

PAINT TABLE

PAINT PER ALM STD 114

PROPRIETARY AND CONFIDENTIAL

THE INFORMATION CONTAINED IN THIS DRAWING IS THE SOLE PROPERTY OF ASW, LLC. ANY REPRODUCTION IN PART OR AS A WHOLE WITHOUT THE WRITTEN PERMISSION OF ASW, LLC IS PROHIBITED.

UNLESS OTHERWISE SPECIFIED:

DIMENSIONS ARE IN INCHES
TOLERANCES:
FRACTIONAL ± 1/16"
ANGULAR: MACH ± 1°
X.X ± 0.05
X.XX ± 0.01 TORQ ±10%
X.XXX ±0.005 BEND ± 2°

INTERPRET GEOMETRIC TOLERANCING PER:

MATERIAL

FINISH

DO NOT SCALE DRAWING

	NAME	DATE
DRAWN		
CHECKED	XXX	
ENG APPR.		
MFG APPR.		
Q.A.		

COMMENTS:

AMERICAN LANDMASTER

REAR HUB ASSEMBLY

SIZE	DWG. NO.	REV
B	CA00026	0
SCALE: 1:10	WEIGHT:	SHEET 1 OF 1

**** PRINTED VERSIONS OF THIS DOCUMENT FOR REFERENCE ONLY ****

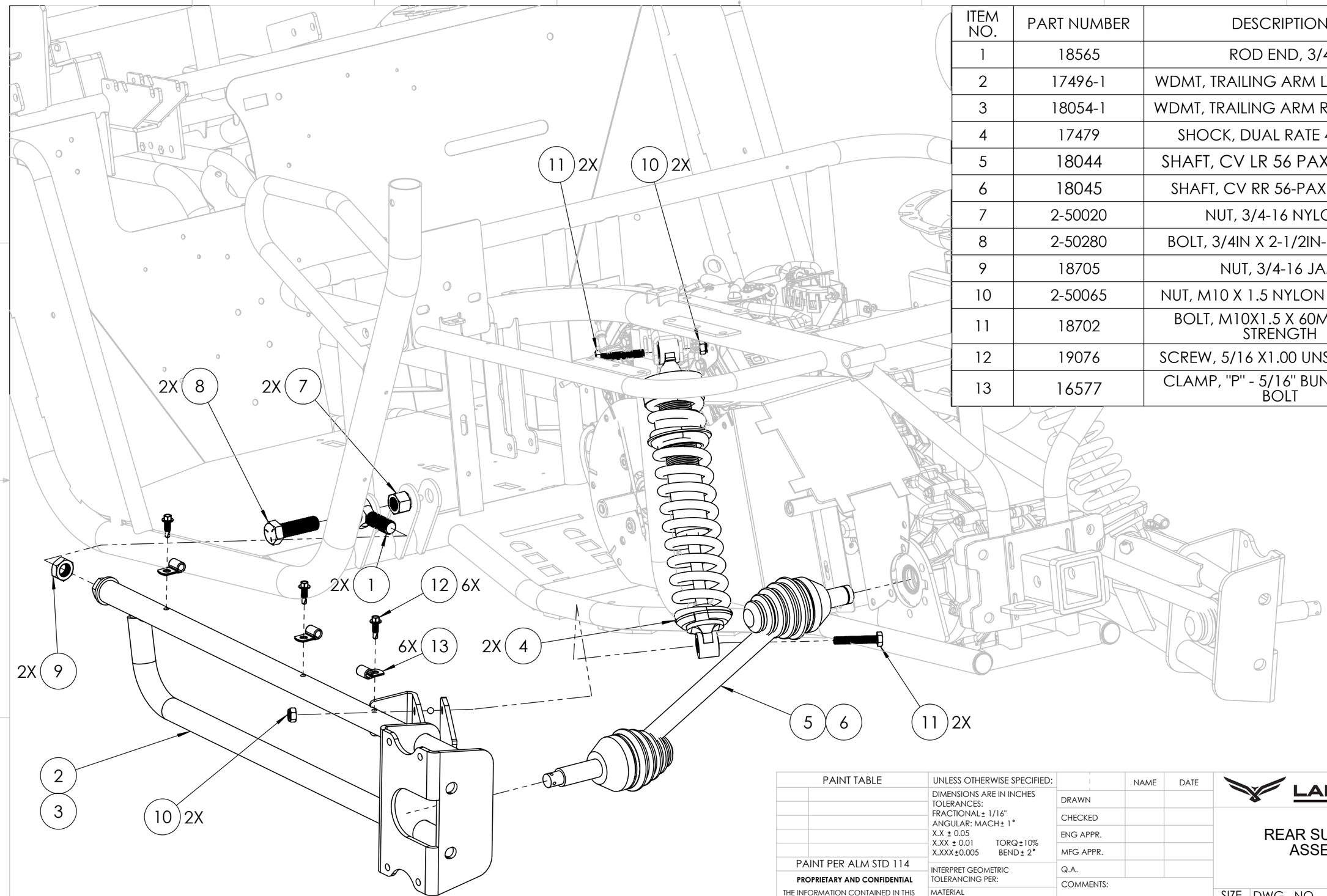

ITEM NO.	PART NUMBER	DESCRIPTION	QTY.
1	18565	ROD END, 3/4	2
2	17496-1	WDMT, TRAILING ARM LH-56"-RAW	1
3	18054-1	WDMT, TRAILING ARM RH -56-RAW	1
4	17479	SHOCK, DUAL RATE 400/900	2
5	18044	SHAFT, CV LR 56 PAXL-35002S	1
6	18045	SHAFT, CV RR 56-PAXL-35003S	1
7	2-50020	NUT, 3/4-16 NYLOCK	2
8	2-50280	BOLT, 3/4IN X 2-1/2IN-HH G5-FT	2
9	18705	NUT, 3/4-16 JAM	2
10	2-50065	NUT, M10 X 1.5 NYLON LOCKING	4
11	18702	BOLT, M10X1.5 X 60MM HIGH STRENGTH	4
12	19076	SCREW, 5/16 X1.00 UNSLT HWSDS	6
13	16577	CLAMP, "P" - 5/16" BUNDLE; M10 BOLT	6

PAINT TABLE

PAINT PER ALM STD 114

PROPRIETARY AND CONFIDENTIAL

THE INFORMATION CONTAINED IN THIS DRAWING IS THE SOLE PROPERTY OF ASW, LLC. ANY REPRODUCTION IN PART OR AS A WHOLE WITHOUT THE WRITTEN PERMISSION OF ASW, LLC IS PROHIBITED.

UNLESS OTHERWISE SPECIFIED:

DIMENSIONS ARE IN INCHES
TOLERANCES:
FRACTIONAL ± 1/16"
ANGULAR: MACH ± 1°
X.X ± 0.05
X.XX ± 0.01 TORQ ±10%
X.XXX ±0.005 BEND ± 2°

INTERPRET GEOMETRIC TOLERANCING PER:

MATERIAL

FINISH

DO NOT SCALE DRAWING

	NAME	DATE
DRAWN		
CHECKED		
ENG APPR.		
MFG APPR.		
Q.A.		

COMMENTS:

AMERICAN LANDMASTER

REAR SUSPENSION ASSEMBLY 1

SIZE	DWG. NO.	REV
B	CA00026	0

SCALE: 1:5 WEIGHT: SHEET 1 OF 1

**** PRINTED VERSIONS OF THIS DOCUMENT FOR REFERENCE ONLY ****

ITEM NO.	PART NUMBER	DESCRIPTION	QTY.
1	2-30623	HUB, UTV-DUST CAP	2
2	2-50215	BOLT, 3/8IN X 1-1/4IN HEX HEAD G5	8
3	2-50010	NUT, 3/8-16 NYLOCK	8
4	16625	NUT, M16 X 1.5 CASTLE	2
5	15384	WASHER, BELLEVILLE M16	2
6	2-30621	HUB-UTV-COTTER PIN	2

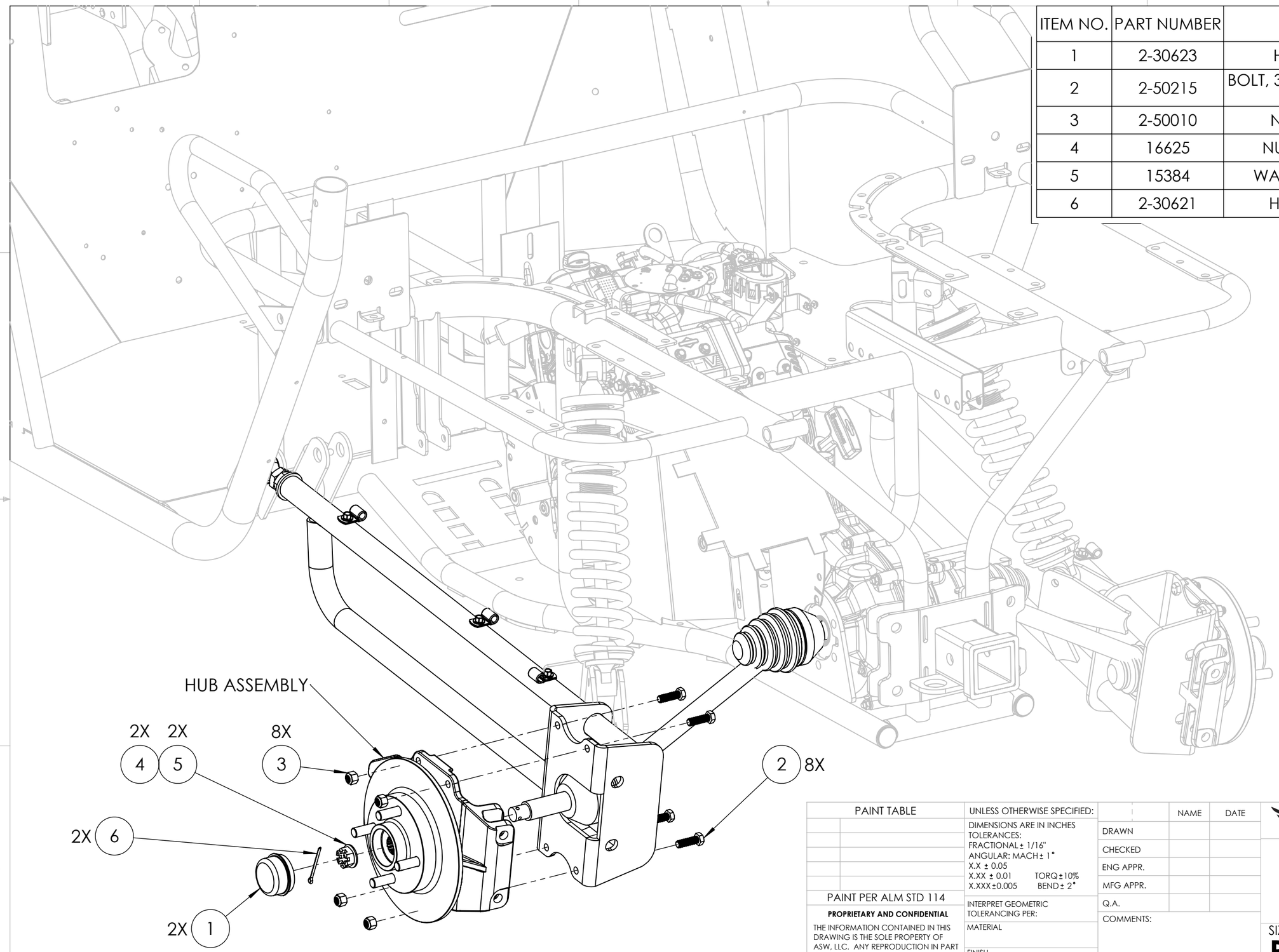

**** PRINTED VERSIONS OF THIS DOCUMENT FOR REFERENCE ONLY ****

PAINT TABLE

PAINT PER ALM STD 114

PROPRIETARY AND CONFIDENTIAL

THE INFORMATION CONTAINED IN THIS DRAWING IS THE SOLE PROPERTY OF ASW, LLC. ANY REPRODUCTION IN PART OR AS A WHOLE WITHOUT THE WRITTEN PERMISSION OF ASW, LLC IS PROHIBITED.

UNLESS OTHERWISE SPECIFIED:
DIMENSIONS ARE IN INCHES
TOLERANCES:
FRACTIONAL ± 1/16"
ANGULAR: MACH ± 1°
X.X ± 0.05
X.XX ± 0.01 TORQ ± 10%
X.XXX ± 0.005 BEND ± 2°

INTERPRET GEOMETRIC TOLERANCING PER:

MATERIAL

FINISH

DO NOT SCALE DRAWING

	NAME	DATE
DRAWN		
CHECKED		
ENG APPR.		
MFG APPR.		
Q.A.		

COMMENTS:

AMERICAN LANDMASTER

REAR SUSPENSION ASSEMBLY 2

SIZE	DWG. NO.	REV
B	CA00026	0

SCALE: 1:5 WEIGHT: SHEET 1 OF 1

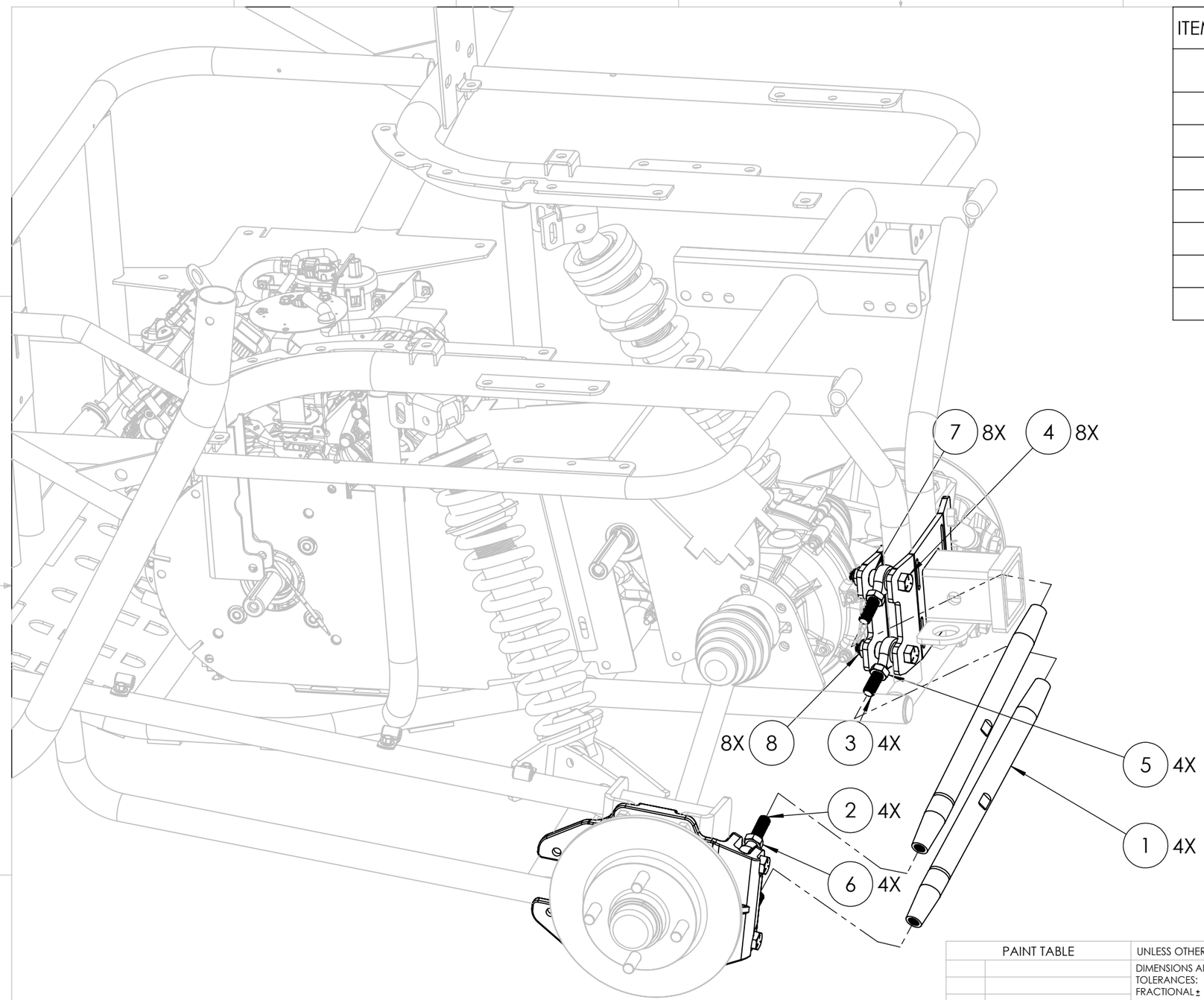

ITEM NO.	PART NUMBER	DESCRIPTION	QTY.
1	17981	ARM, RADIUS 56" OAW-PARDR-35002HDS	4
2	17978	ROD END, 1/2-20 LH	4
3	17979	ROD END, 1/2-20 RH	4
4	2-50249	BOLT, 1/2IN-20 X 2.5 IN FT HH	8
5	17982	NUT, 1/2-20 THIN RH	4
6	17983	NUT, 1/2-20 THIN LH	4
7	18046	SPACER, .7 X .5 X .285	8
8	18693	NUT, 1/2-20 NYLOCK	8

PAINT TABLE

PAINT PER ALM STD 114

PROPRIETARY AND CONFIDENTIAL

THE INFORMATION CONTAINED IN THIS DRAWING IS THE SOLE PROPERTY OF ASW, LLC. ANY REPRODUCTION IN PART OR AS A WHOLE WITHOUT THE WRITTEN PERMISSION OF ASW, LLC IS PROHIBITED.

UNLESS OTHERWISE SPECIFIED:

DIMENSIONS ARE IN INCHES
TOLERANCES:
FRACTIONAL ± 1/16"
ANGULAR: MACH ± 1°
X.X ± 0.05
X.XX ± 0.01 TORQ ±10%
X.XXX ±0.005 BEND ± 2°

INTERPRET GEOMETRIC TOLERANCING PER:

MATERIAL

FINISH

DO NOT SCALE DRAWING

	NAME	DATE
DRAWN		
CHECKED		
ENG APPR.		
MFG APPR.		
Q.A.		

COMMENTS:

AMERICAN LANDMASTER

REAR SUSPENSION ASSEMBLY 3

SIZE	DWG. NO.	REV
B	CA00026	0

SCALE: 1:5 WEIGHT: SHEET 1 OF 1

**** PRINTED VERSIONS OF THIS DOCUMENT FOR REFERENCE ONLY ****

ITEM NO.	PART NUMBER	DESCRIPTION	QTY.
1	18596	ASM, FRONT RIGHT CORNER MODULE	1
2	18595	ASM, FRONT LEFT CORNER MODULE (FOR LEFT SIDE OF VEHICLE)	1
3	2-11124	BRAKE CALIPER-RAZORBACK (99-22664)	1
4	2-11167	BRAKE PADS-RAZORBACK, TYPE 98 (33-23194)	2
5	2-11168	BRAKE MOUNT PINS-RAZORBACK (05-17221)	2
6	2-11169	BRAKE, RETAINING CLIPS-SMALL-RAZORBACK	2
7	19516	SPRING, .75" LONG X .5 OD X 0.376" ID	2

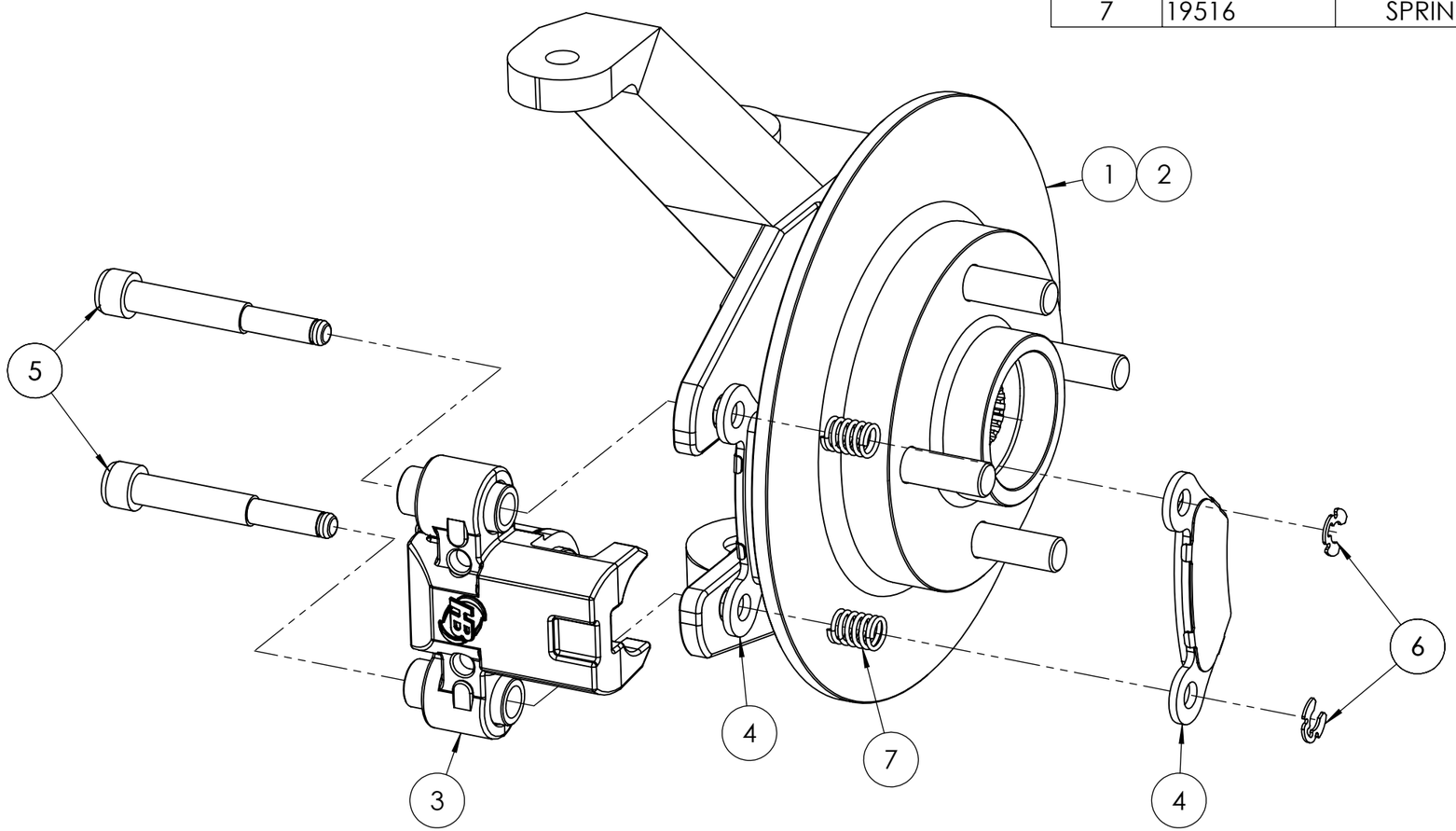

PAINT TABLE

PAINT PER ALM STD 114

PROPRIETARY AND CONFIDENTIAL

THE INFORMATION CONTAINED IN THIS DRAWING IS THE SOLE PROPERTY OF ASW, LLC. ANY REPRODUCTION IN PART OR AS A WHOLE WITHOUT THE WRITTEN PERMISSION OF ASW, LLC IS PROHIBITED.

UNLESS OTHERWISE SPECIFIED:

DIMENSIONS ARE IN INCHES
TOLERANCES:
FRACTIONAL ± 1/16"
ANGULAR: MACH ± 1°
X.X ± 0.05
X.XX ± 0.01 TORQ ± 10%
X.XXX ± 0.005 BEND ± 2°

INTERPRET GEOMETRIC TOLERANCING PER:

MATERIAL

FINISH

DO NOT SCALE DRAWING

	NAME	DATE
DRAWN		
CHECKED	XXX	
ENG APPR.		
MFG APPR.		
Q.A.		

COMMENTS:

AMERICAN LANDMASTER

FRONT HUB ASSEMBLY

SIZE	DWG. NO.	REV
B	CA00026	0

SCALE: 1:10 WEIGHT: SHEET 1 OF 1

**** PRINTED VERSIONS OF THIS DOCUMENT FOR REFERENCE ONLY ****

ITEM NO.	PART NUMBER	DESCRIPTION	QTY.
1	18202-9	WDMT, 56" UPPER A-ARM	2
2	18043	BALL JOINT, K7366	4
3	18191	BUSHING, 1" OD / .625" ID	8
4	2-42114	DOM, A-ARM SPACER	4
5	18201-9	WDMT, A-ARM 56 LOWER	2
6	19867	BOLT, 7/16-20 X 1.25 HCS GR8 YZ	12
7	19868	WASHER, 3/8 IN USS FLAT WASHER YZ	12
8	19869	NUT, 7/16-20 NYLOCK NE GR8 YZ	12

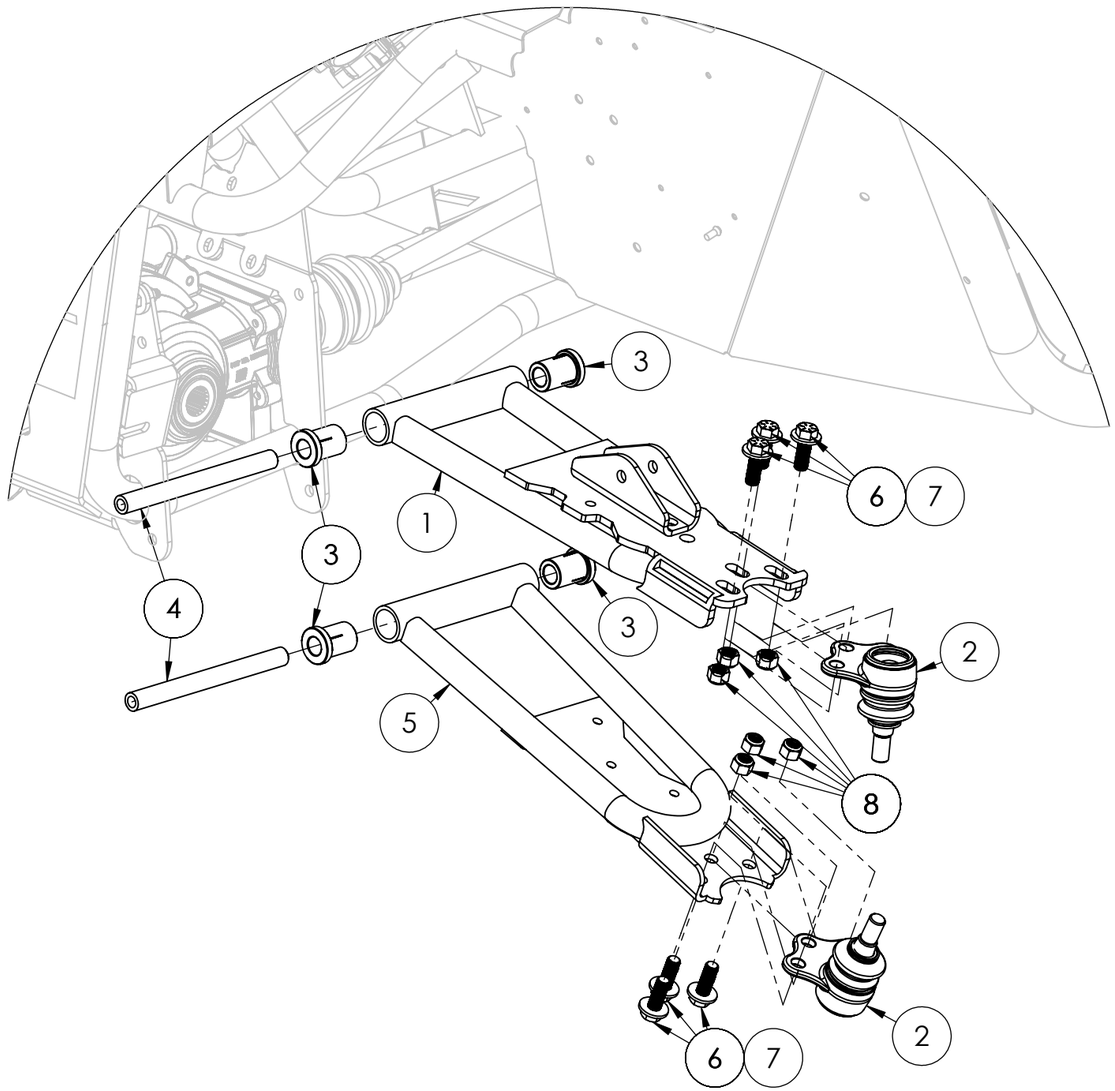

PAINT TABLE

PAINT PER ALM STD 114

PROPRIETARY AND CONFIDENTIAL

THE INFORMATION CONTAINED IN THIS DRAWING IS THE SOLE PROPERTY OF ASW, LLC. ANY REPRODUCTION IN PART OR AS A WHOLE WITHOUT THE WRITTEN PERMISSION OF ASW, LLC IS PROHIBITED.

UNLESS OTHERWISE SPECIFIED:

DIMENSIONS ARE IN INCHES
TOLERANCES:
FRACTIONAL ± 1/16"
ANGULAR: MACH ± 1°
X.X ± 0.05
X.XX ± 0.01 TORQ ±10%
X.XXX ±0.005 BEND ± 2°

INTERPRET GEOMETRIC TOLERANCING PER:

MATERIAL

FINISH

DO NOT SCALE DRAWING

	NAME	DATE
DRAWN		
CHECKED	XXX	
ENG APPR.		
MFG APPR.		
Q.A.		

◆ INDICATES CRITICAL DIMENSIONS

COMMENTS:

AMERICAN LANDMASTER

UPPER AND LOWER CONTROL ARMS ASSEMBLY

SIZE	DWG. NO.	REV
B	CA00026	0

SCALE: 1:20 WEIGHT: SHEET 1 OF 1

**** PRINTED VERSIONS OF THIS DOCUMENT FOR REFERENCE ONLY ****

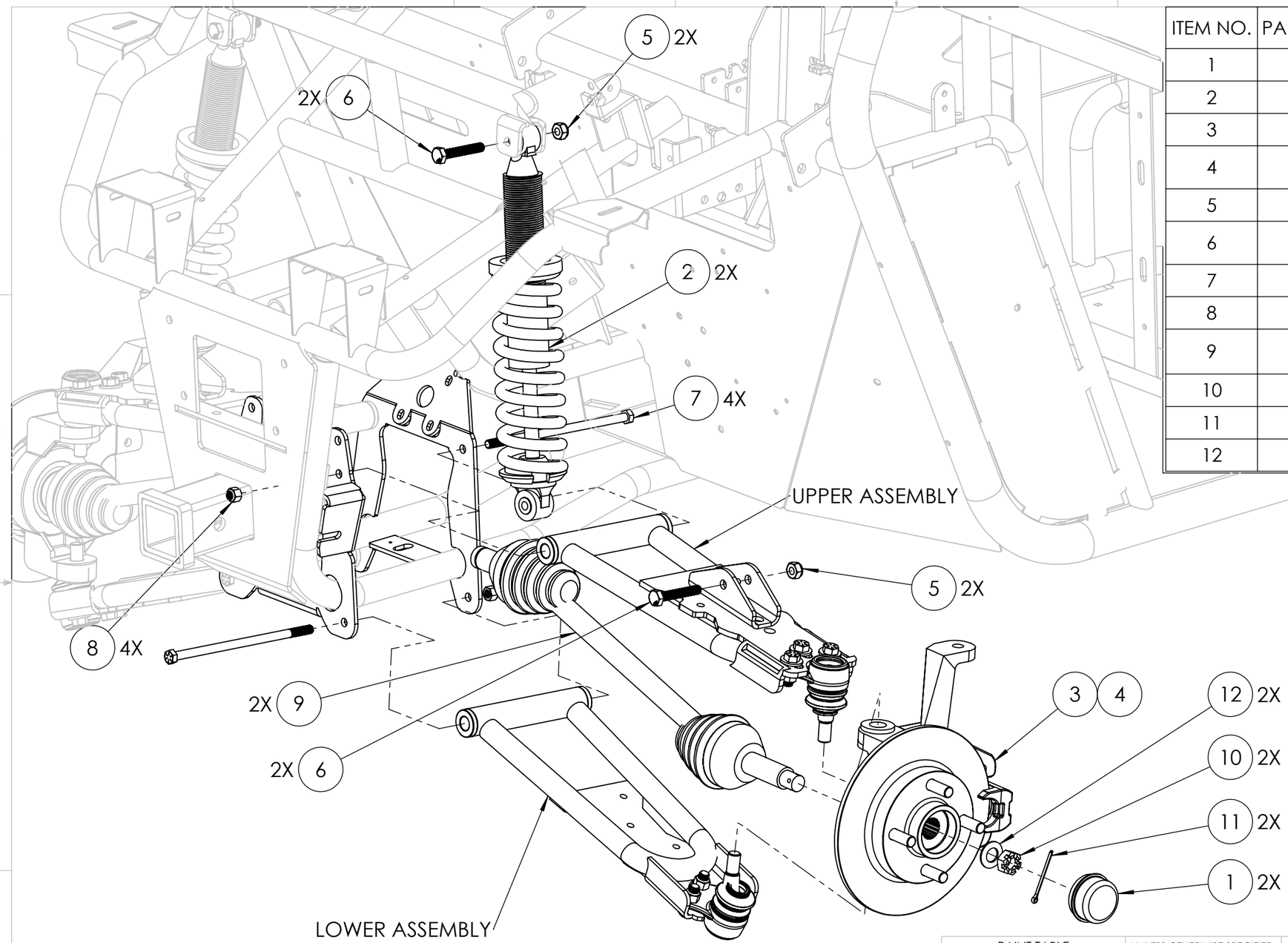

ITEM NO.	PART NUMBER	DESCRIPTION	QTY.
1	2-30623	HUB, UTV-DUST CAP	2
2	17480	SHOCK, 325	2
3	18595	ASM, FRONT LEFT CORNER MODULE	1
4	18596	ASM, FRONT RIGHT CORNER MODULE	1
5	2-50065	NUT, M10 X 1.5 NYLON LOCKING	4
6	18702	BOLT, M10X1.5 X 60MM HIGH STRENGTH	4
7	18701	BOLT, 3/8-24 X 8IN HHCS GR8	4
8	2-50010	NUT, 3/8-16 NYLOCK	4
9	17513	SHAFT, CV FRONT 56 PAXL-35001S	2
10	16625	NUT, M16 X 1.5 CASTLE	2
11	2-30621	HUB-UTV-COTTER PIN	2
12	15384	WASHER, BELLEVILLE M16	2

PAINT TABLE

PAINT PER ALM STD 114

PROPRIETARY AND CONFIDENTIAL

THE INFORMATION CONTAINED IN THIS DRAWING IS THE SOLE PROPERTY OF ASW, LLC. ANY REPRODUCTION IN PART OR AS A WHOLE WITHOUT THE WRITTEN PERMISSION OF ASW, LLC IS PROHIBITED.

UNLESS OTHERWISE SPECIFIED:
DIMENSIONS ARE IN INCHES
TOLERANCES:
FRACTIONAL ± 1/16"
ANGULAR: MACH ± 1°
X.X ± 0.05
X.XX ± 0.01 TORQ ±10%
X.XXX ±0.005 BEND ± 2°

INTERPRET GEOMETRIC TOLERANCING PER:

MATERIAL

FINISH

DO NOT SCALE DRAWING

	NAME	DATE
DRAWN		
CHECKED		
ENG APPR.		
MFG APPR.		
Q.A.		

COMMENTS:

AMERICAN LANDMASTER

FRONT SUSPENSION ASSEMBLY 1

SIZE	DWG. NO.	REV
B	CA00026	0

SCALE: 1:5 WEIGHT: SHEET 1 OF 1

**** PRINTED VERSIONS OF THIS DOCUMENT FOR REFERENCE ONLY ****

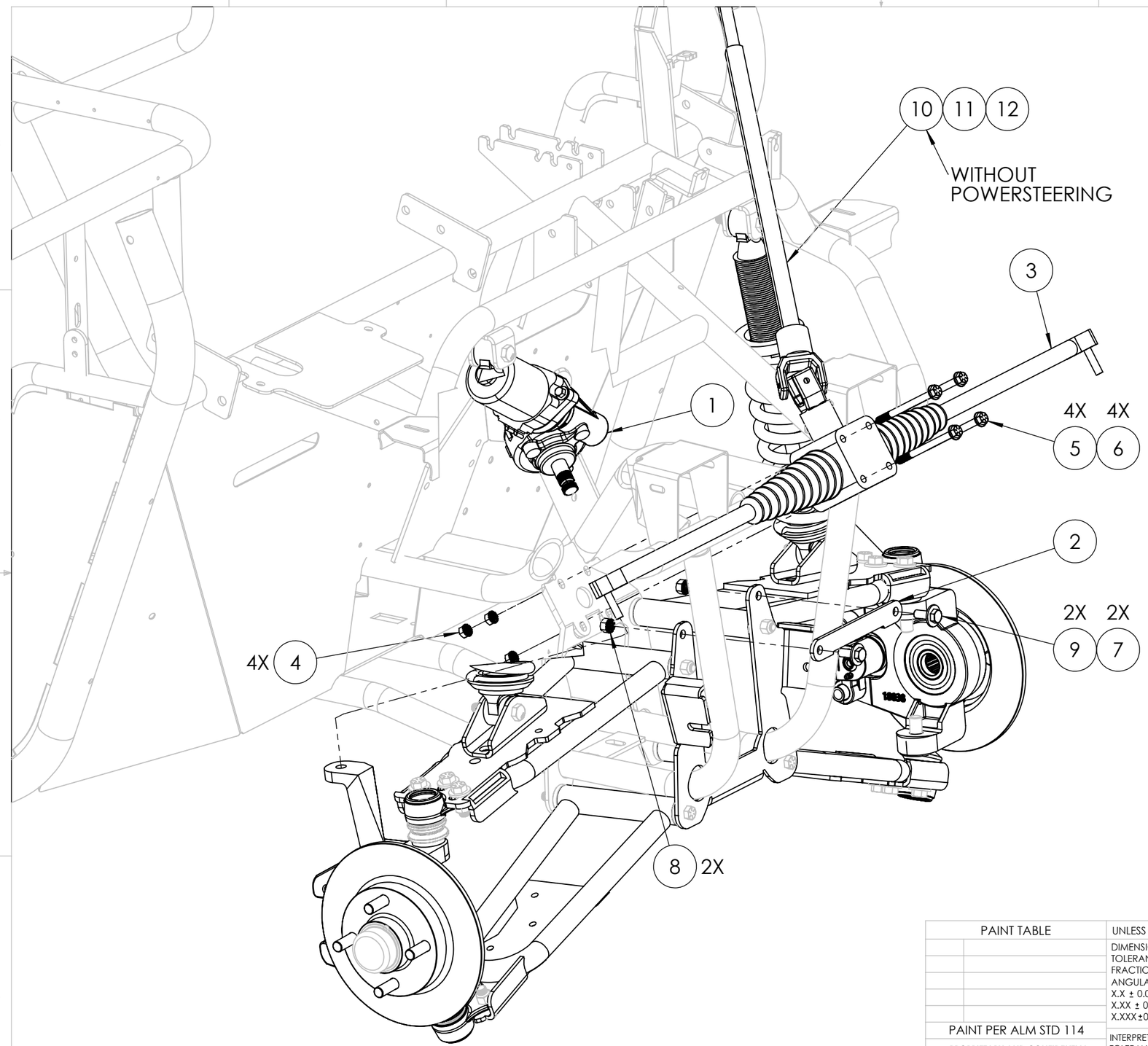

ITEM NO.	PART NUMBER	DESCRIPTION	QTY.
1	19059	KIT, POWER STEERING, W/ CONNECTORS	1
2	16678	FRONT A-ARM TIE BAR 4-LINK - BLACK	1
3	18052	RACK & PINIOW, IRS 56-PARP-350	1
4	2-50005	NUT, 5/16-18 KEPS	4
5	2-50171	BOLT, 5/16IN-18 X 3-3/4IN HH G5	4
6	2-50701	WASHER, 5/16 SAE FLAT	4
7	2-50740	WASHER, 3/8IN USS FLAT WASHER	4
8	2-50013	90675A031_ZINC-PLATED STEEL HEX NUT WITH TOOTH WASHER	2
9	2-50206	BOLT, 3/8-16 X 1 HEX HEAD G5	2
10	2-10526	SHAFT, STEERING - UNIVERSAL	1
11	19928	SHAFT, STEERING UPPER EPS	1
12	19929	SHAFT, STEERING LOWER EPS	1

PAINT TABLE

PAINT PER ALM STD 114

PROPRIETARY AND CONFIDENTIAL

THE INFORMATION CONTAINED IN THIS DRAWING IS THE SOLE PROPERTY OF ASW, LLC. ANY REPRODUCTION IN PART OR AS A WHOLE WITHOUT THE WRITTEN PERMISSION OF ASW, LLC IS PROHIBITED.

UNLESS OTHERWISE SPECIFIED:
DIMENSIONS ARE IN INCHES
TOLERANCES:
FRACTIONAL ± 1/16"
ANGULAR: MACH ± 1°
X.X ± 0.05
X.XX ± 0.01 TORQ ± 10%
X.XXX ± 0.005 BEND ± 2°

INTERPRET GEOMETRIC TOLERANCING PER:

MATERIAL

FINISH

DO NOT SCALE DRAWING

	NAME	DATE
DRAWN		
CHECKED		
ENG APPR.		
MFG APPR.		
Q.A.		

COMMENTS:

AMERICAN LANDMASTER

FRONT SUSPENSION ASSEMBLY 2

SIZE	DWG. NO.	REV
B	CA00026	0

SCALE: 1:5 WEIGHT: SHEET 1 OF 1

**** PRINTED VERSIONS OF THIS DOCUMENT FOR REFERENCE ONLY ****

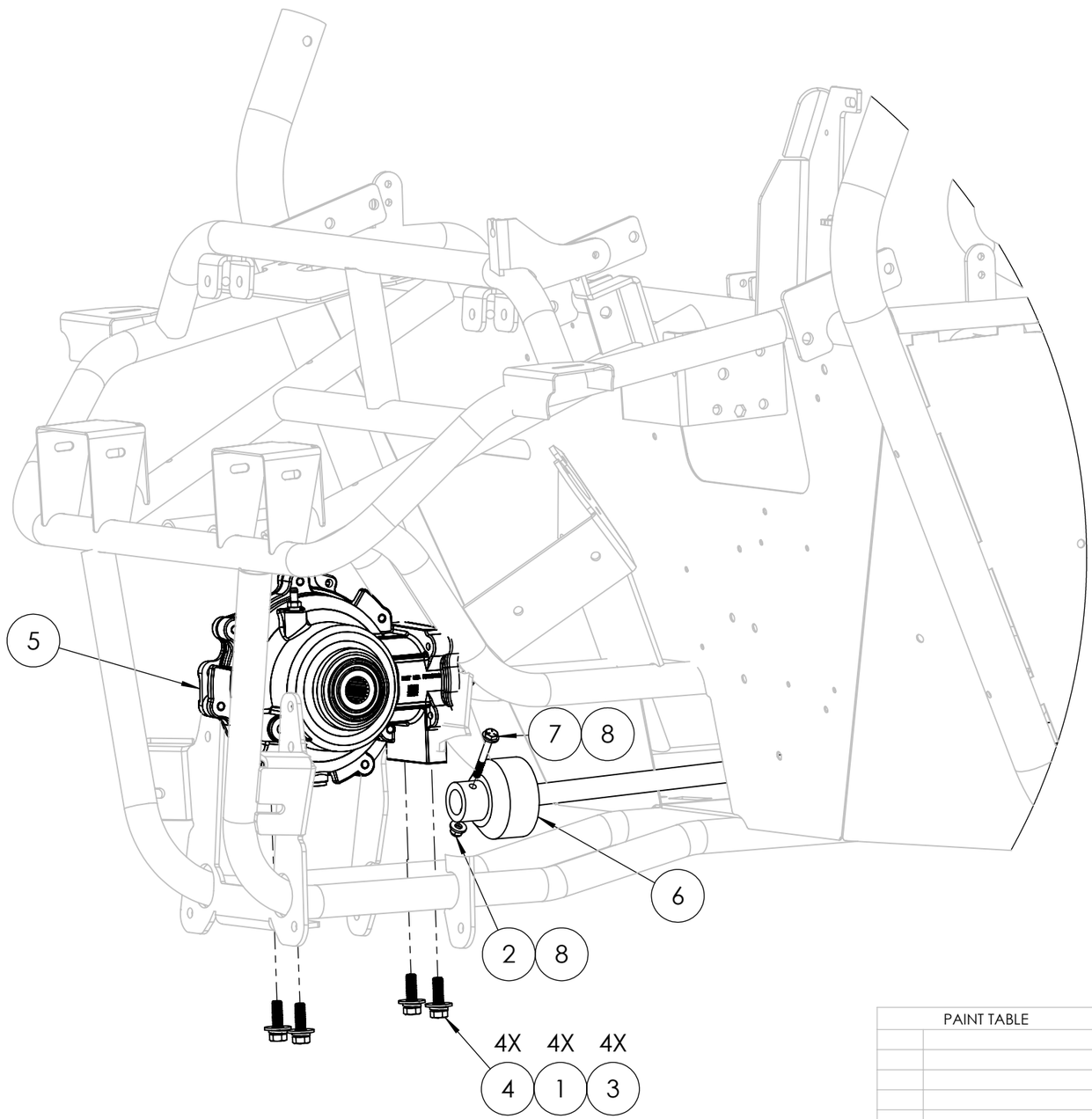

ITEM NO.	PART NUMBER	DESCRIPTION	QTY.
1	2-50741	WASHER, 3/8IN LOCK	4
2	2-50001	NUT, 1/4-20 NYLON LOCKING	1
3	2-50740	WASHER, 3/8IN USS FLAT WASHER	4
4	2-50215	BOLT, 3/8IN X 1-1/4IN HEX HEAD G5	4
5	2-20839	FRONT DIFFERENTIAL-CFD #6203-01-282	1
6	16430	SHAFT, CV DRIVE - FRONT 36.5" OAL	1
7	2-50092	BOLT, 1/4IN X 2IN HH G5	1
8	2-50717	WASHER, 1/4IN SAE FLAT	2

PAINT TABLE

PAINT PER ALM STD 114

PROPRIETARY AND CONFIDENTIAL

THE INFORMATION CONTAINED IN THIS DRAWING IS THE SOLE PROPERTY OF ASW, LLC. ANY REPRODUCTION IN PART OR AS A WHOLE WITHOUT THE WRITTEN PERMISSION OF ASW, LLC IS PROHIBITED.

UNLESS OTHERWISE SPECIFIED:
DIMENSIONS ARE IN INCHES
TOLERANCES:
FRACTIONAL ± 1/16"
ANGULAR: MACH ± 1°
X.X ± 0.05
X.XX ± 0.01 TORQ ± 10%
X.XXX ± 0.005 BEND ± 2°

INTERPRET GEOMETRIC TOLERANCING PER:

MATERIAL

FINISH

DO NOT SCALE DRAWING

	NAME	DATE
DRAWN		
CHECKED		
ENG APPR.		
MFG APPR.		
Q.A.		

COMMENTS:

AMERICAN LANDMASTER

FRONT TRANSAXLE ASSEMBLY

SIZE	DWG. NO.	REV
B	CA00026	0

SCALE: 1:5 WEIGHT: SHEET 1 OF 1

**** PRINTED VERSIONS OF THIS DOCUMENT FOR REFERENCE ONLY ****

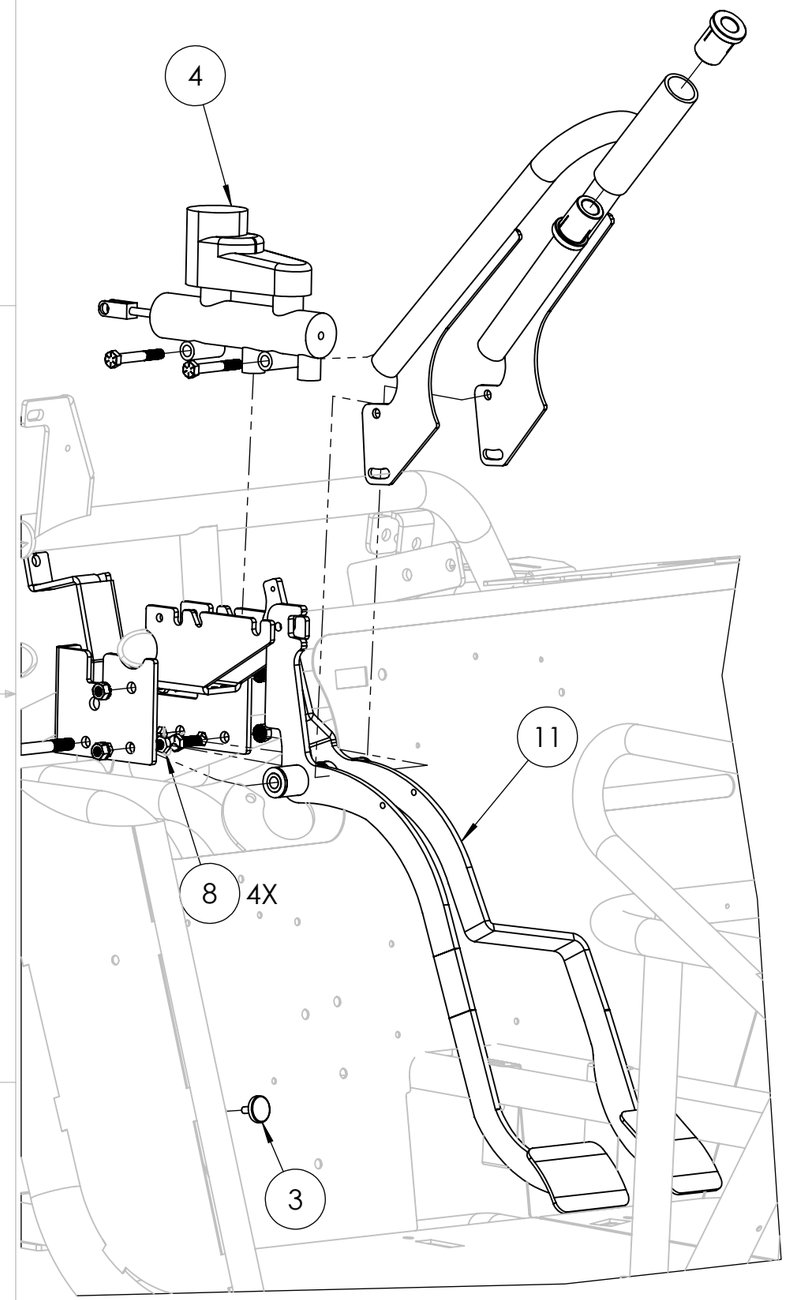

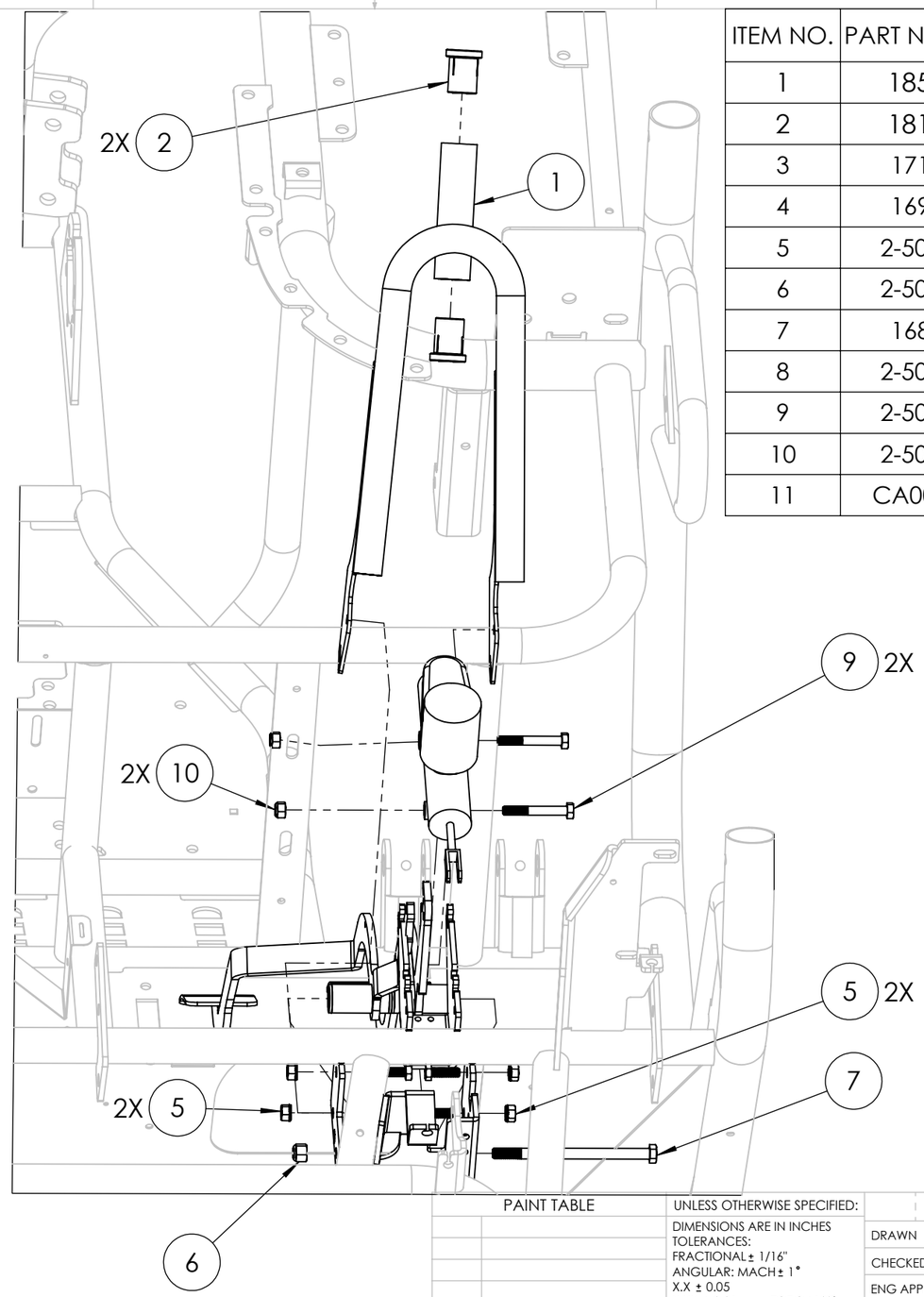

ITEM NO.	PART NUMBER	DESCRIPTION	QTY.
1	18555	WDMT, STEERING SUPPORT	1
2	18191	BUSHING, 1" OD / .625" ID	2
3	17184	RUBBER, 2018 PEDAL STOP	1
4	16905	MASTER CYLINDER, 4WD	1
5	2-50005	NUT, 5/16-18 KEPS	4
6	2-50010	NUT, 3/8-16 NYLOCK	1
7	16888	BOLT, 3/8" x 5.5"	1
8	2-50150	BOLT, 5/16-18 X 1 HEX HEAD G5	4
9	2-50156	BOLT, 5/16IN X 2-1/4IN HEX HEAD G5	2
10	2-50007	NUT, 5/16-18 NYLOCK	2
11	CA00033	ASM, PEDAL CLUSTER-2023	1

PAINT TABLE

PAINT PER ALM STD 114

PROPRIETARY AND CONFIDENTIAL

THE INFORMATION CONTAINED IN THIS DRAWING IS THE SOLE PROPERTY OF ASW, LLC. ANY REPRODUCTION IN PART OR AS A WHOLE WITHOUT THE WRITTEN PERMISSION OF ASW, LLC IS PROHIBITED.

UNLESS OTHERWISE SPECIFIED:
DIMENSIONS ARE IN INCHES
TOLERANCES:
FRACTIONAL ± 1/16"
ANGULAR: MACH ± 1°
X.X ± 0.05
X.XX ± 0.01 TORQ ±10%
X.XXX ±0.005 BEND ± 2°

INTERPRET GEOMETRIC TOLERANCING PER:

MATERIAL

FINISH

DO NOT SCALE DRAWING

	NAME	DATE
DRAWN		
CHECKED		
ENG APPR.		
MFG APPR.		
Q.A.		

COMMENTS:

AMERICAN LANDMASTER

STEERING SUPPORT AND PEDAL ASSEMBLY

SIZE	DWG. NO.	REV
B	CA00026	0

SCALE: 1:5 | WEIGHT: | SHEET 1 OF 1

**** PRINTED VERSIONS OF THIS DOCUMENT FOR REFERENCE ONLY ****

ITEM NO.	PART NUMBER	DESCRIPTION	QTY.
1	15823	NUT, CLIP ON TAPPED - M6 X 1.0; 11 GA MA	5
2	14426	BOLT, M6 X 1.0 X 14	5
3	19355	BRKT, UPPER PEDAL GUARD	1
4	19356	BRKT, LOWER PEDAL GUARD	1

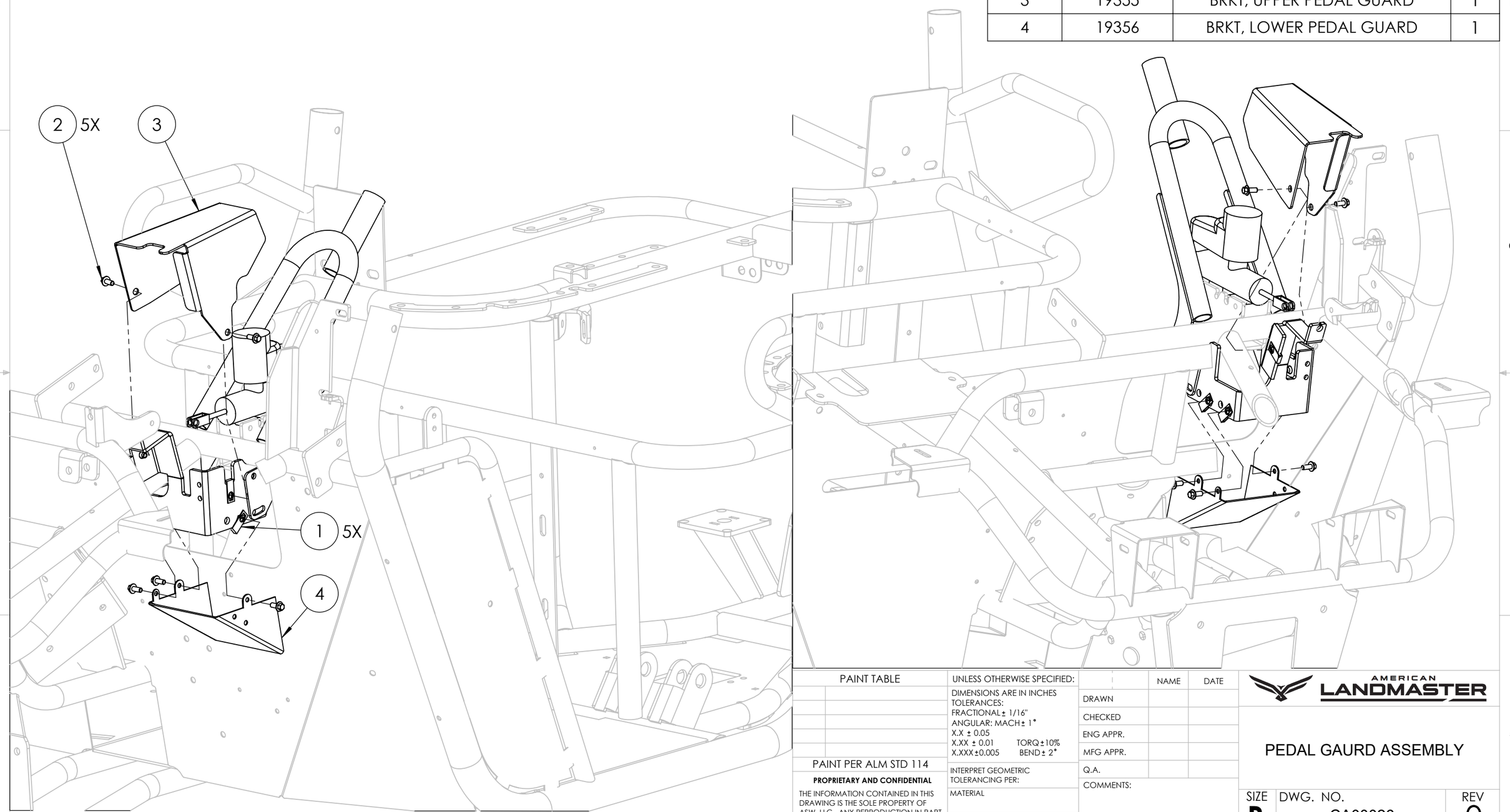

**** PRINTED VERSIONS OF THIS DOCUMENT FOR REFERENCE ONLY ****

PAINT TABLE

PAINT PER ALM STD 114

PROPRIETARY AND CONFIDENTIAL

THE INFORMATION CONTAINED IN THIS DRAWING IS THE SOLE PROPERTY OF ASW, LLC. ANY REPRODUCTION IN PART OR AS A WHOLE WITHOUT THE WRITTEN PERMISSION OF ASW, LLC IS PROHIBITED.

UNLESS OTHERWISE SPECIFIED:

DIMENSIONS ARE IN INCHES
TOLERANCES:
FRACTIONAL ± 1/16"
ANGULAR: MACH ± 1°
X.X ± 0.05
X.XX ± 0.01 TORQ ±10%
X.XXX ±0.005 BEND ± 2°

INTERPRET GEOMETRIC TOLERANCING PER:

MATERIAL

FINISH

DO NOT SCALE DRAWING

	NAME	DATE
DRAWN		
CHECKED		
ENG APPR.		
MFG APPR.		
Q.A.		

COMMENTS:

AMERICAN LANDMASTER

PEDAL GAURD ASSEMBLY

SIZE	DWG. NO.	REV
B	CA00026	0

SCALE: 1:5 WEIGHT: SHEET 1 OF 1

ITEM NO.	PART NUMBER	DESCRIPTION	QTY.
1	18378	BRAKE LINE, REAR STD	1
2	16902	BRAKE LINE, FRONT HANGING BRK	1

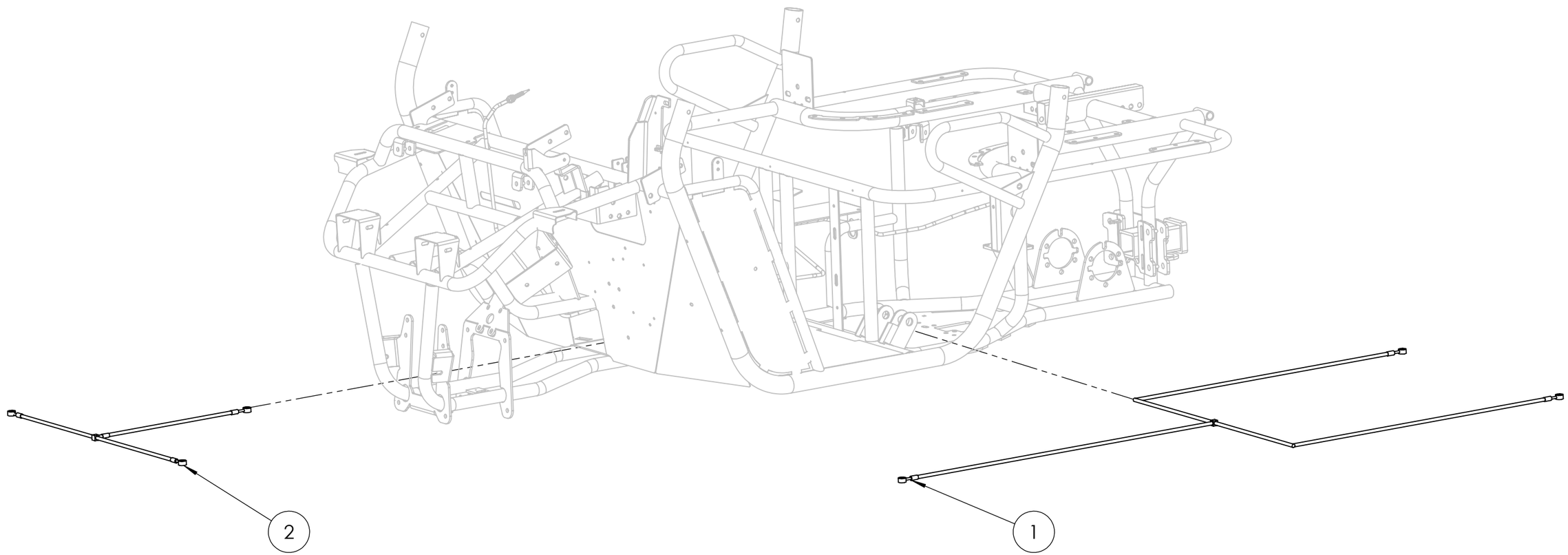

PAINT TABLE	

PAINT PER ALM STD 114

PROPRIETARY AND CONFIDENTIAL

THE INFORMATION CONTAINED IN THIS DRAWING IS THE SOLE PROPERTY OF ASW, LLC. ANY REPRODUCTION IN PART OR AS A WHOLE WITHOUT THE WRITTEN PERMISSION OF ASW, LLC IS PROHIBITED.

UNLESS OTHERWISE SPECIFIED:

DIMENSIONS ARE IN INCHES
TOLERANCES:
FRACTIONAL ± 1/16"
ANGULAR: MACH ± 1°
X.X ± 0.05
X.XX ± 0.01 TORQ ±10%
X.XXX ±0.005 BEND ± 2°

INTERPRET GEOMETRIC TOLERANCING PER:

MATERIAL

FINISH

DO NOT SCALE DRAWING

	NAME	DATE
DRAWN		
CHECKED		
ENG APPR.		
MFG APPR.		
Q.A.		

COMMENTS:

AMERICAN LANDMASTER

BRAKE LINE ASSEMBLY

SIZE	DWG. NO.	REV
B	CA00026	0
SCALE: 1:10	WEIGHT:	SHEET 1 OF 1

**** PRINTED VERSIONS OF THIS DOCUMENT FOR REFERENCE ONLY ****

ITEM NO.	PART NUMBER	DESCRIPTION	QTY.
1	2-11137	BRAKE LINE-BANJO BOLT (M10X1.0)	2
2	2-11138	BRAKE LINE-CRUSH WASHER (M10 SIZE)	4

INCLUDES RIGHT AND LEFT

SAME HARDWARE FOR REAR

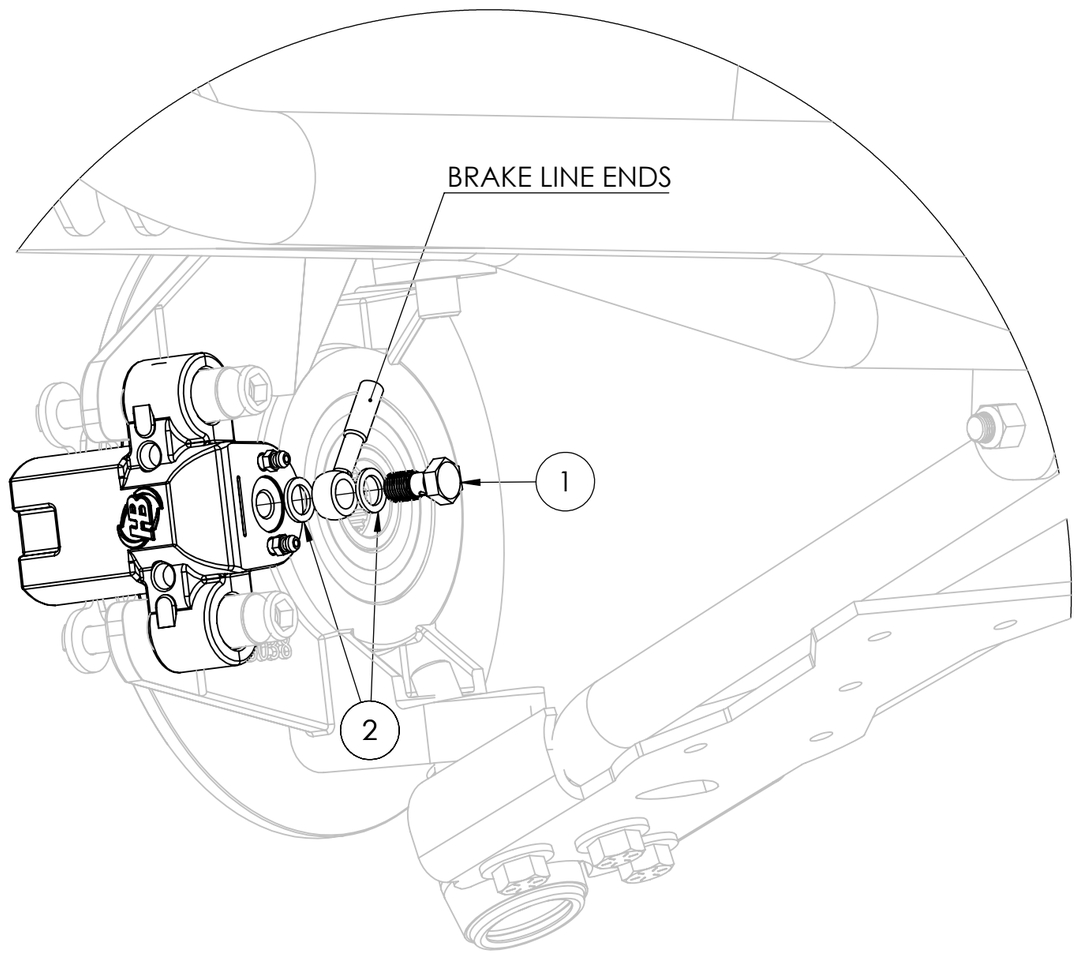

**** PRINTED VERSIONS OF THIS DOCUMENT FOR REFERENCE ONLY ****

PAINT TABLE
PAINT PER ALM STD 114

PROPRIETARY AND CONFIDENTIAL

THE INFORMATION CONTAINED IN THIS DRAWING IS THE SOLE PROPERTY OF ASW, LLC. ANY REPRODUCTION IN PART OR AS A WHOLE WITHOUT THE WRITTEN PERMISSION OF ASW, LLC IS PROHIBITED.

UNLESS OTHERWISE SPECIFIED:

DIMENSIONS ARE IN INCHES
TOLERANCES:
FRACTIONAL ± 1/16"
ANGULAR: MACH ± 1°
X.X ± 0.05
X.XX ± 0.01 TORQ ±10%
X.XXX ±0.005 BEND ± 2°

INTERPRET GEOMETRIC TOLERANCING PER:

MATERIAL

FINISH

DO NOT SCALE DRAWING

	NAME	DATE
DRAWN		
CHECKED	XXX	
ENG APPR.		
MFG APPR.		
Q.A.		

COMMENTS:

AMERICAN LANDMASTER

BRAKE LINE TO ROTOR ASSEMBLY

SIZE	DWG. NO.	REV
B	CA00026	0

SCALE: 1:20 WEIGHT: SHEET 1 OF 1

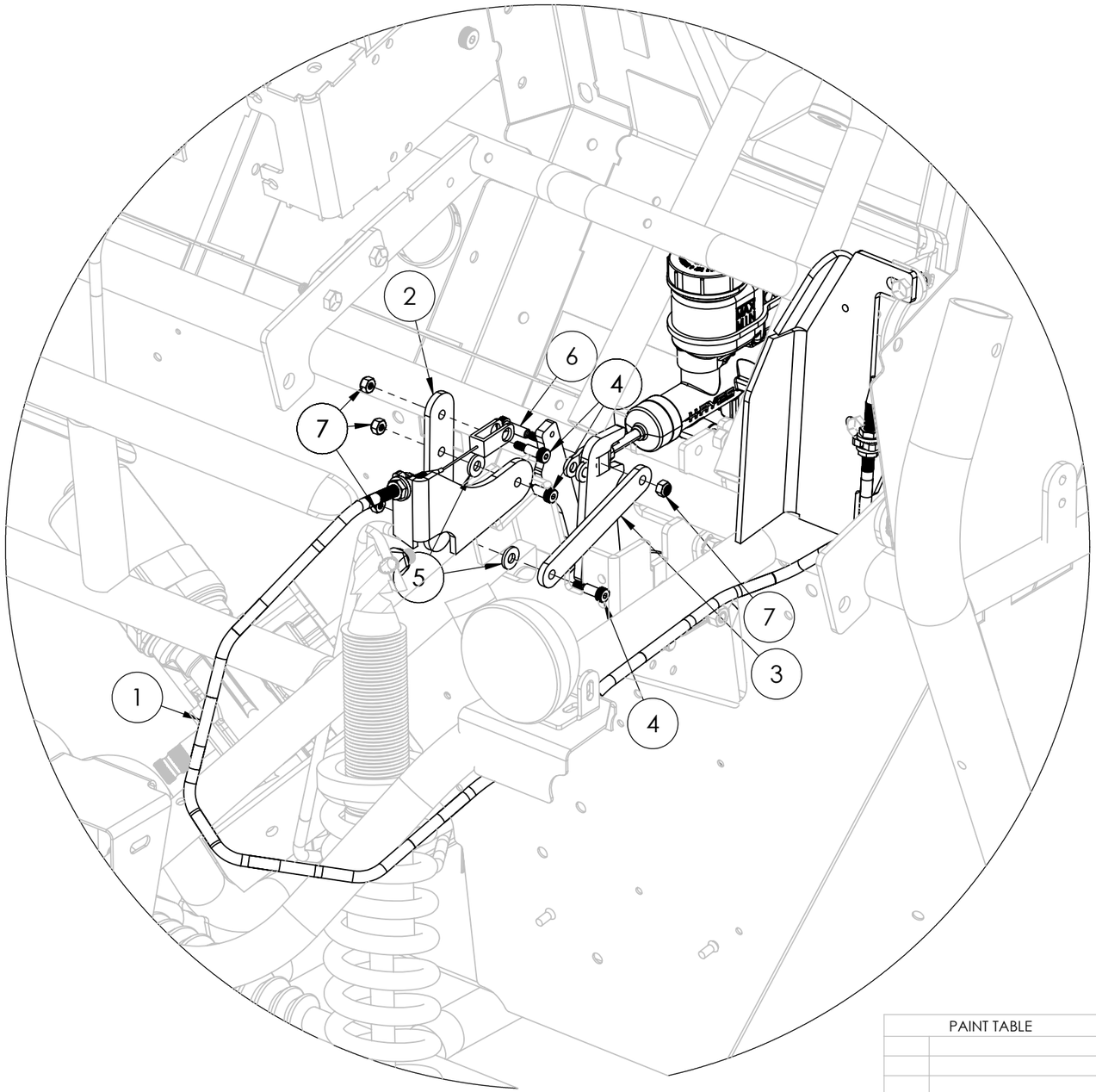

ITEM NO.	PART NUMBER	DESCRIPTION	QTY.
1	19562	CABLE, PARKING UTV	1
2	19568	BRKT, PARK LINK	1
3	19569	BRKT, PARK LINK	1
4	19563	BOLT, 1/4" DIA 1/2" SHOULDER 10-24	3
5	2-50717	WASHER, 1/4IN SAE FLAT	2
6	19564	BOLT, 1/4" DIA 3/4" SHOULDER 10-24	1
7	19072	NUT, #10-24 NYLOCK 18-8SS	4

**** PRINTED VERSIONS OF THIS DOCUMENT FOR REFERENCE ONLY ****

PAINT TABLE

PAINT PER ALM STD 114

PROPRIETARY AND CONFIDENTIAL

THE INFORMATION CONTAINED IN THIS DRAWING IS THE SOLE PROPERTY OF ASW, LLC. ANY REPRODUCTION IN PART OR AS A WHOLE WITHOUT THE WRITTEN PERMISSION OF ASW, LLC IS PROHIBITED.

UNLESS OTHERWISE SPECIFIED:
DIMENSIONS ARE IN INCHES
TOLERANCES:
FRACTIONAL ± 1/16"
ANGULAR: MACH ± 1°
X.X ± 0.05
X.XX ± 0.01 TORQ ±10%
X.XXX ±0.005 BEND ± 2°

INTERPRET GEOMETRIC TOLERANCING PER:

MATERIAL

FINISH

DO NOT SCALE DRAWING

	NAME	DATE
DRAWN		
CHECKED	XXX	
ENG APPR.		
MFG APPR.		
Q.A.		

◆ INDICATES CRITICAL DIMENSIONS

COMMENTS:

AMERICAN LANDMASTER

PARKING BRAKE ASSEMBLY

SIZE	DWG. NO.	REV
B	CA00026	0

SCALE: 1:50 WEIGHT: SHEET 1 OF 1

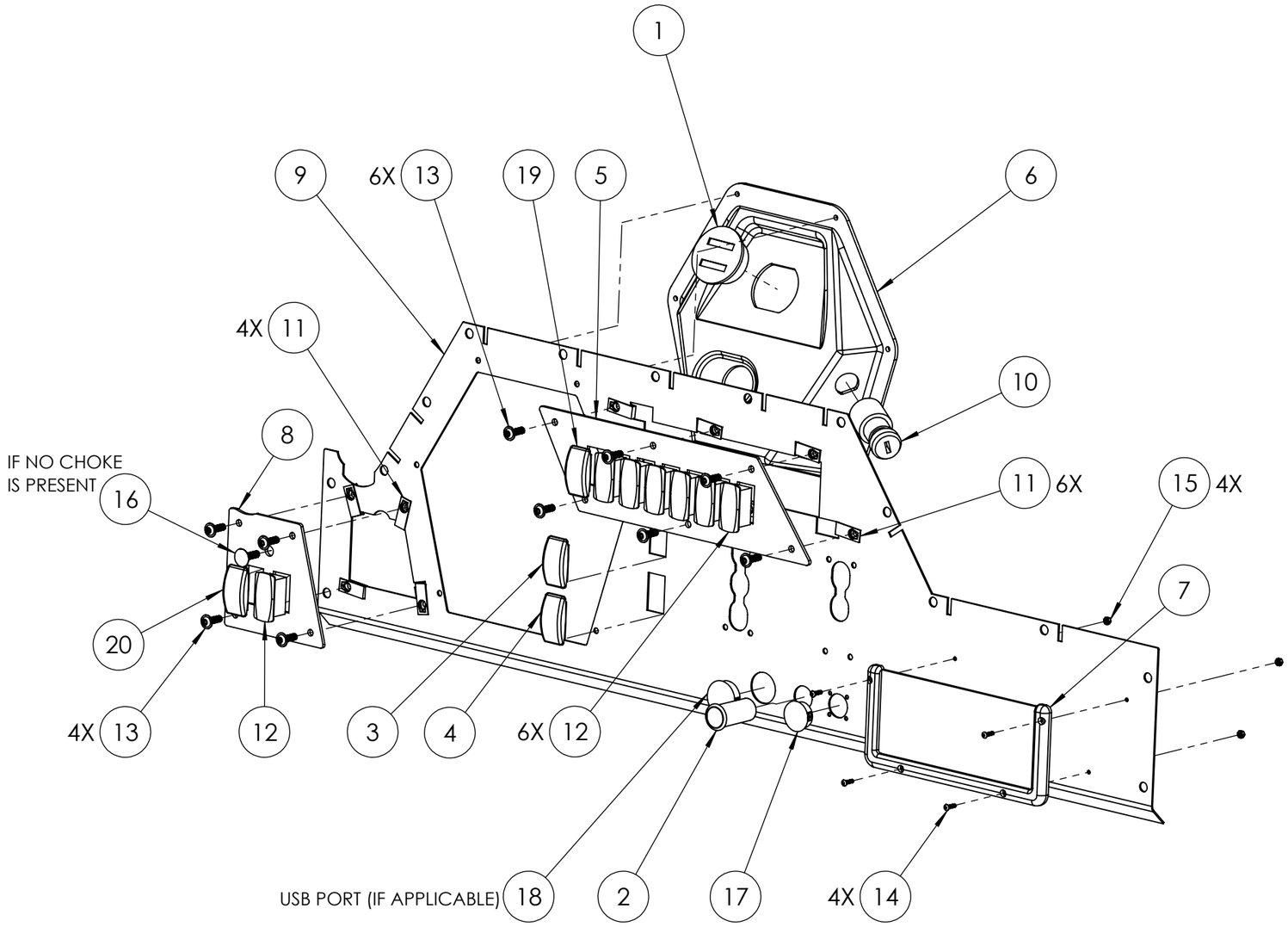

ITEM NO.	PART NUMBER	DESCRIPTION	QTY.
1	19909	GAUGE, 12V BATT VOLT/HOUR COMBO RND	1
2	2-70080	OUTLET, ACCESSORY-12V DC POWER	1
3	18380	LIGHT, WARNING ENGINE/OIL	1
4	18381	LIGHT, WARNING PARK/SEATBELT	1
5	18351-1	BRKT, 7 SWITCH PANEL - RAW	1
6	18075	DASH, STEERING COLUMN - ABS BLK	1
7	18356	NET, 4X9	1
8	18352-1	BRKT, LOWER DASH PANEL	1
9	18073-1	BRKT, DASH FACE - RAW	1
10	18484	SWITCH, IGNITION	1
11	15823	NUT, CLIP ON TAPPED - M6 X 1.0; 11 GA MA	10
12	18506	ROCKER SWITCH HOLE PLUG	7
13	18134	SCREW, M6 X 1 X 20 WIDE FLG BUTT HD SS	10
14	18699	BOLT, #5-40 - 1/2 LONG	4
15	18698	NUT, #5-40 NYLOCK	4
16	2-50817	PIN, PUSH-IN - PLASTIC	1
17	19117	PLUG,PLASTIC ROUND	1
18	19239	PLUG, LOCKING PANEL PLUG 1-3/16IN THICK,BLK	1
19	18502	SWITCH, ROCKER, 2WD/4WD	1
20	18383	SWITCH, FLOOD/HEADLIGHT	1

PAINT TABLE

PAINT PER ALM STD 114

PROPRIETARY AND CONFIDENTIAL

THE INFORMATION CONTAINED IN THIS DRAWING IS THE SOLE PROPERTY OF ASW, LLC. ANY REPRODUCTION IN PART OR AS A WHOLE WITHOUT THE WRITTEN PERMISSION OF ASW, LLC IS PROHIBITED.

UNLESS OTHERWISE SPECIFIED:
DIMENSIONS ARE IN INCHES
TOLERANCES:
FRACTIONAL ± 1/16"
ANGULAR: MACH ± 1°
X.X ± 0.05
X.XX ± 0.01 TORQ ± 10%
X.XXX ± 0.005 BEND ± 2°

INTERPRET GEOMETRIC TOLERANCING PER:

MATERIAL

FINISH

DO NOT SCALE DRAWING

	NAME	DATE
DRAWN		
CHECKED		
ENG APPR.		
MFG APPR.		
Q.A.		

COMMENTS:

AMERICAN LANDMASTER

DASH FACE ASSEMBLY

SIZE	DWG. NO.	REV
B	CA00026	0

SCALE: 1:5 WEIGHT: SHEET 1 OF 1

**** PRINTED VERSIONS OF THIS DOCUMENT FOR REFERENCE ONLY ****

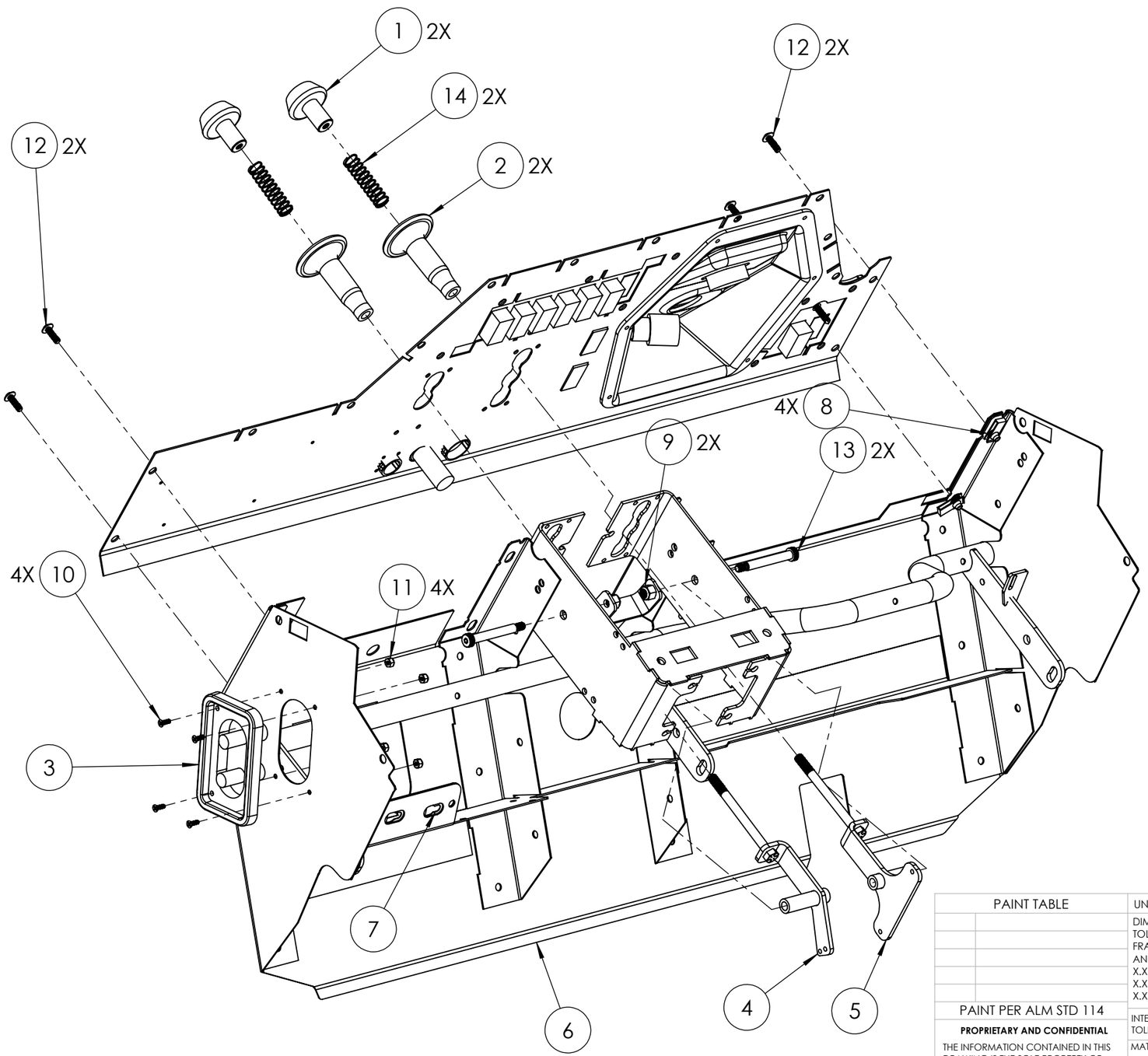

ITEM NO.	PART NUMBER	DESCRIPTION	QTY.
1	18095	KNOB, SHIFTER	2
2	18096	SHIFTER, LIFTER	2
3	18357	BATTERY, EZ CHARGE REMOTE STUDS	1
4	18114-1	WDMT, DIFF SHIFTER	1
5	18112-1	WDMT, FNR SHIFTER	1
6	18354-1	WDMT, LOWER DASH STRUCTURE	1
7	18347	BRKT, PDM MOUNT	1
8	15823	NUT, CLIP ON TAPPED - M6 X 1.0; 11 GA MA	4
9	2-50010	NUT, 3/8-16 NYLOCK	2
10	18695	#8-32 1/2" TAPER FHS	4
11	18694	#8-32 NYLOCK NUT	4
12	18134	SCREW, M6 X 1 X 20 WIDE FLG BUTT HD SS	4
13	18360	BOLT, SHOULDER 2.5" X 3/8"	2
14	18113	SPRING, SHIFTER	2

**** PRINTED VERSIONS OF THIS DOCUMENT FOR REFERENCE ONLY ****

PAINT TABLE

PAINT PER ALM STD 114

PROPRIETARY AND CONFIDENTIAL

THE INFORMATION CONTAINED IN THIS DRAWING IS THE SOLE PROPERTY OF ASW, LLC. ANY REPRODUCTION IN PART OR AS A WHOLE WITHOUT THE WRITTEN PERMISSION OF ASW, LLC IS PROHIBITED.

UNLESS OTHERWISE SPECIFIED:

DIMENSIONS ARE IN INCHES
TOLERANCES:
FRACTIONAL ± 1/16"
ANGULAR: MACH ± 1°
X.X ± 0.05
X.XX ± 0.01 TORQ ±10%
X.XXX ±0.005 BEND ± 2°

INTERPRET GEOMETRIC TOLERANCING PER:

MATERIAL

FINISH

DO NOT SCALE DRAWING

	NAME	DATE
DRAWN		
CHECKED		
ENG APPR.		
MFG APPR.		
Q.A.		

COMMENTS:

AMERICAN LANDMASTER

DASH ASSEMBLY 1

SIZE	DWG. NO.	REV
B	CA00026	0

SCALE: 1:5 WEIGHT: SHEET 1 OF 1

ITEM NO.	PART NUMBER	DESCRIPTION	QTY.
1	18387	LEVER, PARK BRAKE	1
2	2-50005	NUT, 5/16-18 KEPS	8
3	2-50701	WASHER, 5/16 SAE FLAT	4
4	2-50150	BOLT, 5/16-18 X 1 HEX HEAD G5	8

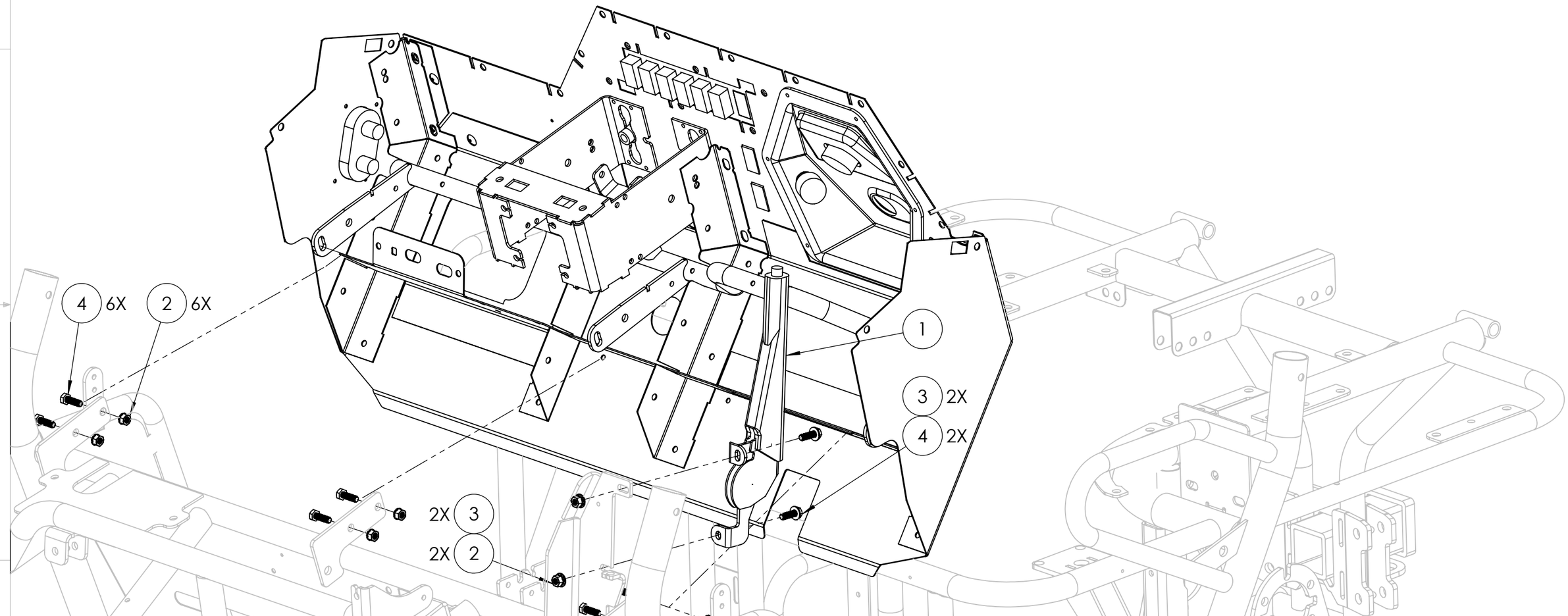

**** PRINTED VERSIONS OF THIS DOCUMENT FOR REFERENCE ONLY ****

PAINT TABLE

PAINT PER ALM STD 114

PROPRIETARY AND CONFIDENTIAL

THE INFORMATION CONTAINED IN THIS DRAWING IS THE SOLE PROPERTY OF ASW, LLC. ANY REPRODUCTION IN PART OR AS A WHOLE WITHOUT THE WRITTEN PERMISSION OF ASW, LLC IS PROHIBITED.

UNLESS OTHERWISE SPECIFIED:

DIMENSIONS ARE IN INCHES
TOLERANCES:
FRACTIONAL ± 1/16"
ANGULAR: MACH ± 1°
X.X ± 0.05
X.XX ± 0.01 TORQ ± 10%
X.XXX ± 0.005 BEND ± 2°

INTERPRET GEOMETRIC TOLERANCING PER:

MATERIAL

FINISH

DO NOT SCALE DRAWING

	NAME	DATE
DRAWN		
CHECKED		
ENG APPR.		
MFG APPR.		
Q.A.		

COMMENTS:

AMERICAN LANDMASTER

DASH ASSEMBLY 2

SIZE	DWG. NO.	REV
B	CA00026	0

SCALE: 1:5 WEIGHT: SHEET 1 OF 1

ITEM NO.	PART NUMBER	DESCRIPTION	QTY.
1	18175	CABLE, DIFF LOCK STD	1
2	16437	CABLE, SHIFTER - STD CAB	2

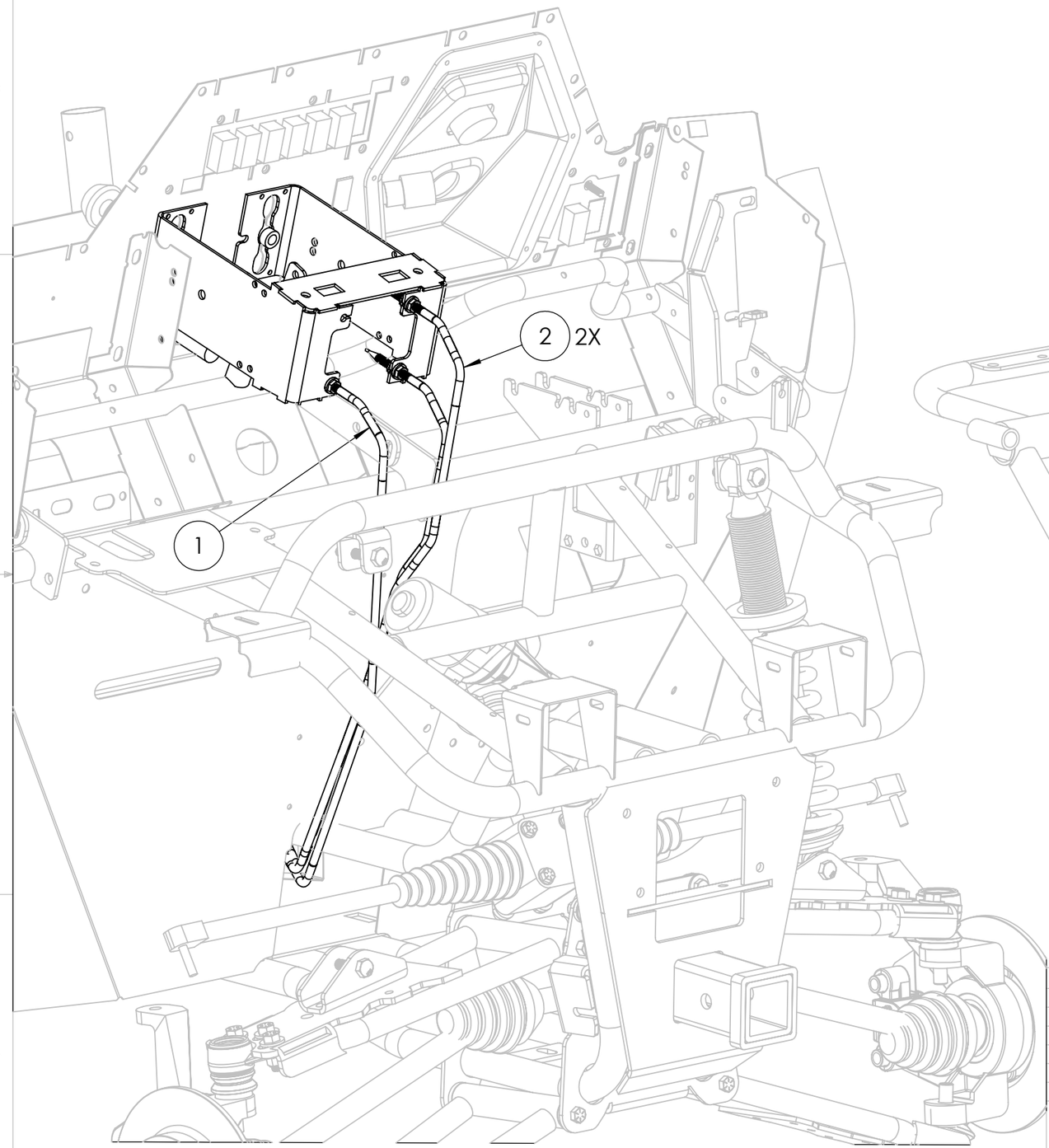

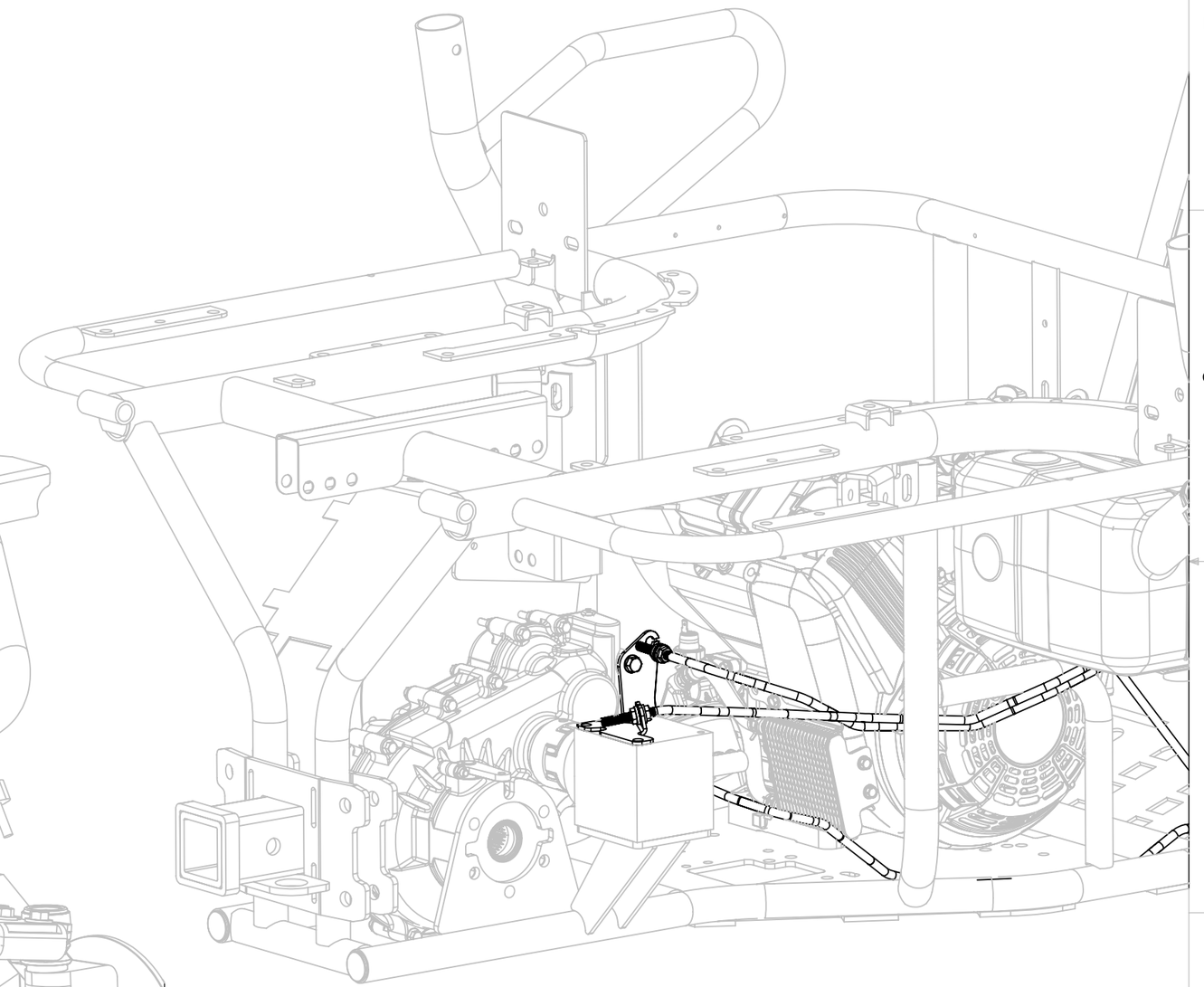

**** PRINTED VERSIONS OF THIS DOCUMENT FOR REFERENCE ONLY ****

PAINT TABLE

PAINT PER ALM STD 114

PROPRIETARY AND CONFIDENTIAL

THE INFORMATION CONTAINED IN THIS DRAWING IS THE SOLE PROPERTY OF ASW, LLC. ANY REPRODUCTION IN PART OR AS A WHOLE WITHOUT THE WRITTEN PERMISSION OF ASW, LLC IS PROHIBITED.

UNLESS OTHERWISE SPECIFIED:
DIMENSIONS ARE IN INCHES
TOLERANCES:
FRACTIONAL ± 1/16"
ANGULAR: MACH ± 1°
X.X ± 0.05
X.XX ± 0.01 TORQ ± 10%
X.XXX ± 0.005 BEND ± 2°

INTERPRET GEOMETRIC TOLERANCING PER:

MATERIAL

FINISH

DO NOT SCALE DRAWING

	NAME	DATE
DRAWN		
CHECKED		
ENG APPR.		
MFG APPR.		
Q.A.		

COMMENTS:

AMERICAN LANDMASTER

CABLE ASSEMBLY

SIZE	DWG. NO.	REV
B	CA00026	0

SCALE: 1:5 WEIGHT: SHEET 1 OF 1

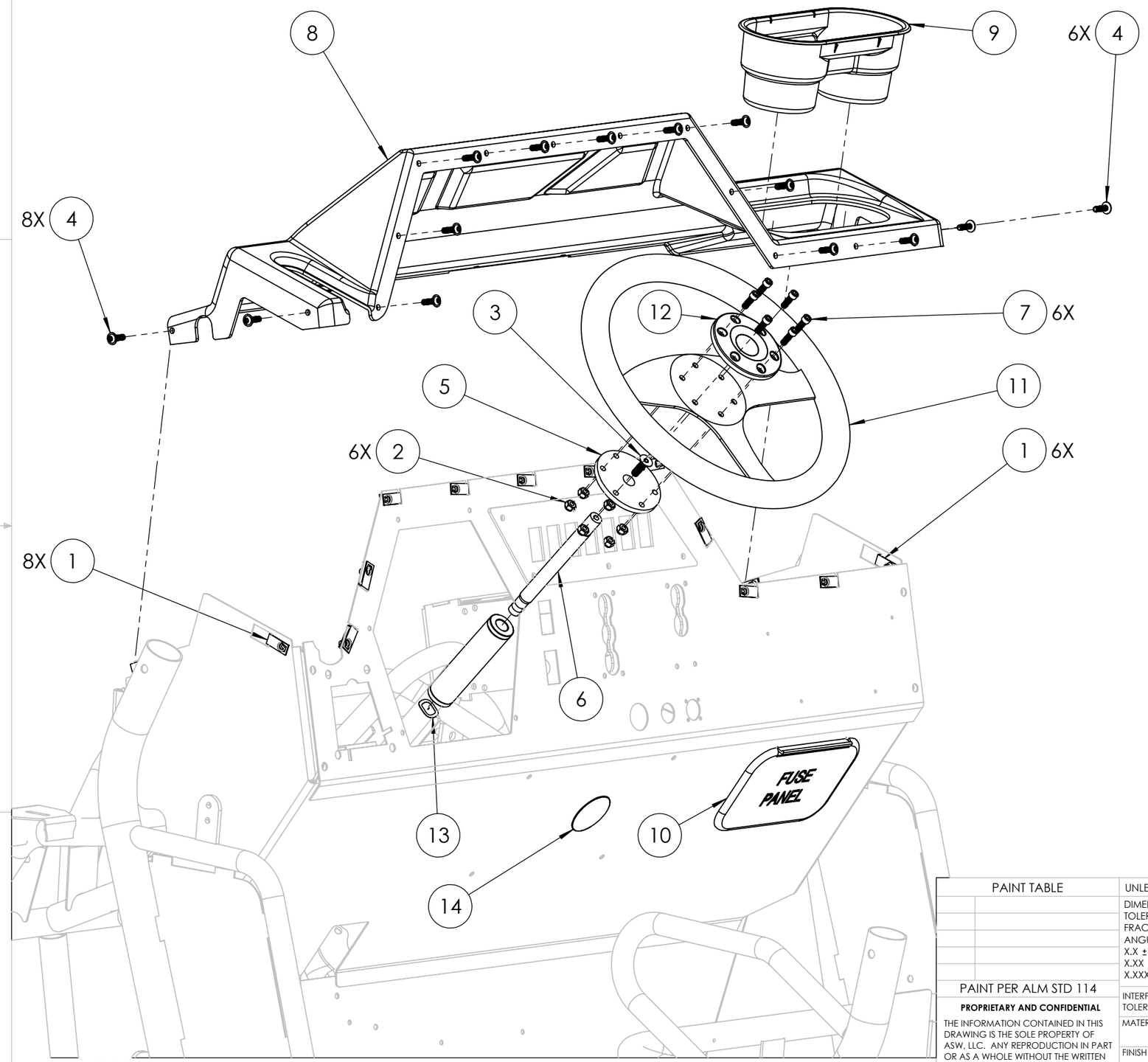

ITEM NO.	PART NUMBER	DESCRIPTION	QTY.
1	15823	NUT, CLIP ON TAPPED - M6 X 1.0; 11 GA MA	14
2	2-50001	NUT, 1/4-20 NYLON LOCKING	6
3	2-50098	BOLT, TAPERED 5/16-18 X 1IN	1
4	18134	SCREW, M6 X 1 X 20 WIDE FLG BUTT HD SS	14
5	2-18169	STEERING HUB DISK (SEE SPECS)	1
6	2-18170	STEERING HUB SHAFT	1
7	2-50636	BOLT, 1/4IN X 3/4IN SOCKET HEAD (SS)	6
8	18072	DASH, THERMOFORMED TOP	1
9	14842	CUP HOLDER - 200 SERIES	1
10	18361	PANEL, DASH ACCESS	1
11	14845	STEERING WHEEL - 200S	1
12	14846	CAP, STEERING WHEEL BLK - 200S	1
13	2-50708	WASHER, 0.642in ID x 1in OD - WAVE	1
14	19565	CAP,2" DIA .016-.215" PANEL	1

PAINT TABLE

PAINT PER ALM STD 114

PROPRIETARY AND CONFIDENTIAL

THE INFORMATION CONTAINED IN THIS DRAWING IS THE SOLE PROPERTY OF ASW, LLC. ANY REPRODUCTION IN PART OR AS A WHOLE WITHOUT THE WRITTEN PERMISSION OF ASW, LLC IS PROHIBITED.

UNLESS OTHERWISE SPECIFIED:

DIMENSIONS ARE IN INCHES
TOLERANCES:
FRACTIONAL ± 1/16"
ANGULAR: MACH ± 1°
X.X ± 0.05
X.XX ± 0.01 TORQ ±10%
X.XXX ±0.005 BEND ± 2°

INTERPRET GEOMETRIC TOLERANCING PER:

MATERIAL

FINISH

DO NOT SCALE DRAWING

	NAME	DATE
DRAWN		
CHECKED		
ENG APPR.		
MFG APPR.		
Q.A.		

COMMENTS:

AMERICAN LANDMASTER

DASH TOP AND STEERING WHEEL ASSEMBLY

SIZE	DWG. NO.	REV
B	CA00026	0

SCALE: 1:5 WEIGHT: SHEET 1 OF 1

**** PRINTED VERSIONS OF THIS DOCUMENT FOR REFERENCE ONLY ****

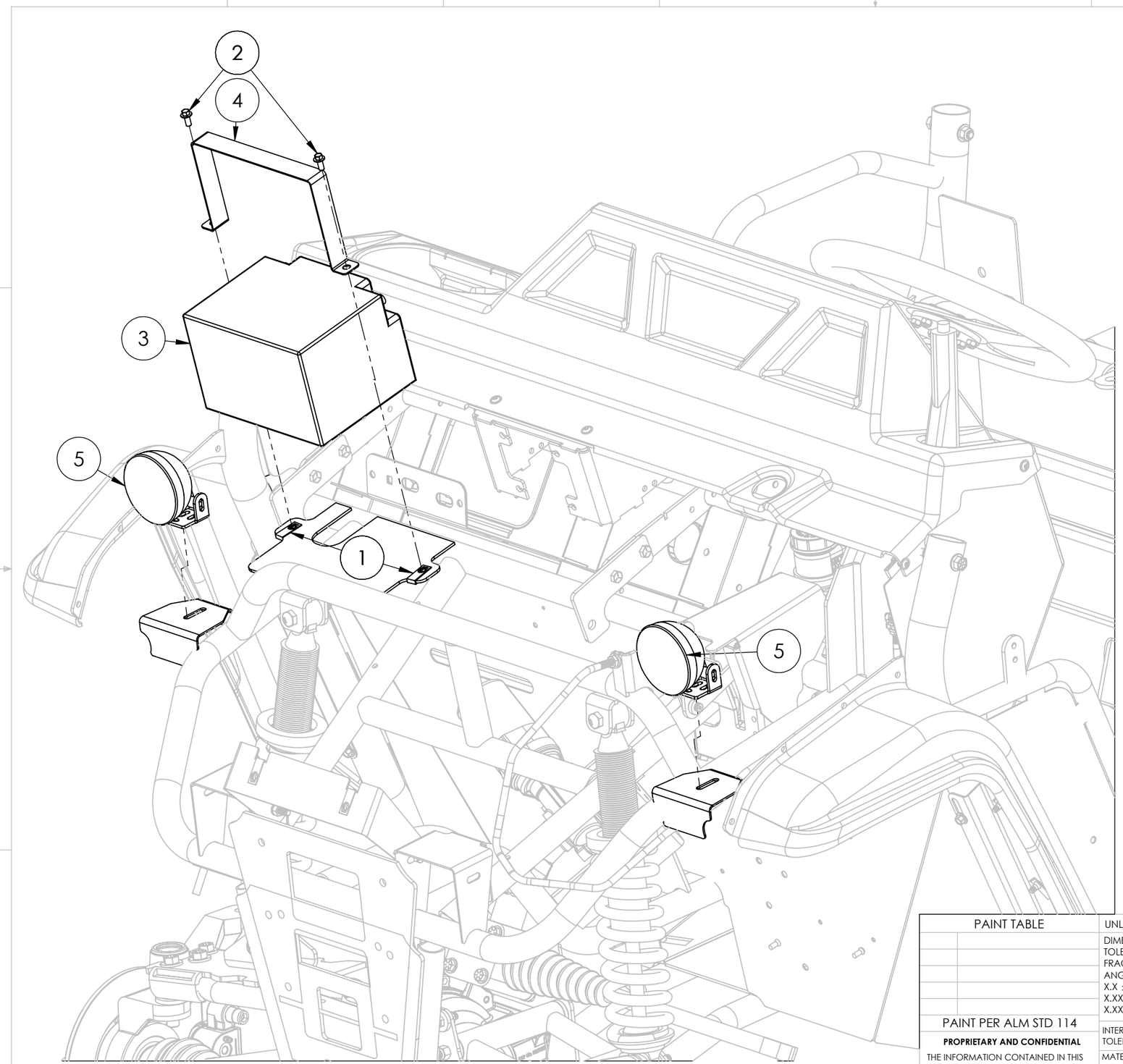

ITEM NO.	PART NUMBER	DESCRIPTION	QTY.
1	15823	NUT, CLIP ON TAPPED - M6 X 1.0; 11 GA MA	2
2	14426	BOLT, M6 X 1.0 X 14	2
3	2-69998	BATTERY, UB12350 SEALED AGM - 315CCA	1
4	18126	BRKT, BATTERY HOLD DOWN 2021	1
5	18609	LIGHT, HEAD LIGHT / WORK LIGHT	2

**** PRINTED VERSIONS OF THIS DOCUMENT FOR REFERENCE ONLY ****

PAINT TABLE

PAINT PER ALM STD 114

PROPRIETARY AND CONFIDENTIAL

THE INFORMATION CONTAINED IN THIS DRAWING IS THE SOLE PROPERTY OF ASW, LLC. ANY REPRODUCTION IN PART OR AS A WHOLE WITHOUT THE WRITTEN PERMISSION OF ASW, LLC IS PROHIBITED.

UNLESS OTHERWISE SPECIFIED:

DIMENSIONS ARE IN INCHES
TOLERANCES:
FRACTIONAL ± 1/16"
ANGULAR: MACH ± 1°
X.X ± 0.05
X.XX ± 0.01 TORQ ±10%
X.XXX ±0.005 BEND ± 2°

INTERPRET GEOMETRIC TOLERANCING PER:

MATERIAL

FINISH

DO NOT SCALE DRAWING

	NAME	DATE
DRAWN	RHW	6/20/2022
CHECKED	XXX	
ENG APPR.		
MFG APPR.		
Q.A.		

◆ INDICATES CRITICAL DIMENSIONS

COMMENTS:

AMERICAN LANDMASTER

BATTERY AND LIGHTS ASSEMBLY

SIZE	DWG. NO.	REV
B	CA00026	0

SCALE: 1:50 WEIGHT: SHEET 1 OF 1

ITEM NO.	PART NUMBER	DESCRIPTION	QTY.
1	2-50770	WASHER, #10 SAE FLAT	5
2	2-50630	SCREW, #10 X 3/4IN HEX WASHER TEK-BLK	5
3	19450	SURROUND, STR FOAM	1
4	19521	POCKET, STORAGE PASS SIDE	1
5	19574	SCREW, #6 X 0.50 THREAD FORM SS	5
6	19575	WASHER, FLAT #6 X 0.625 SS	5

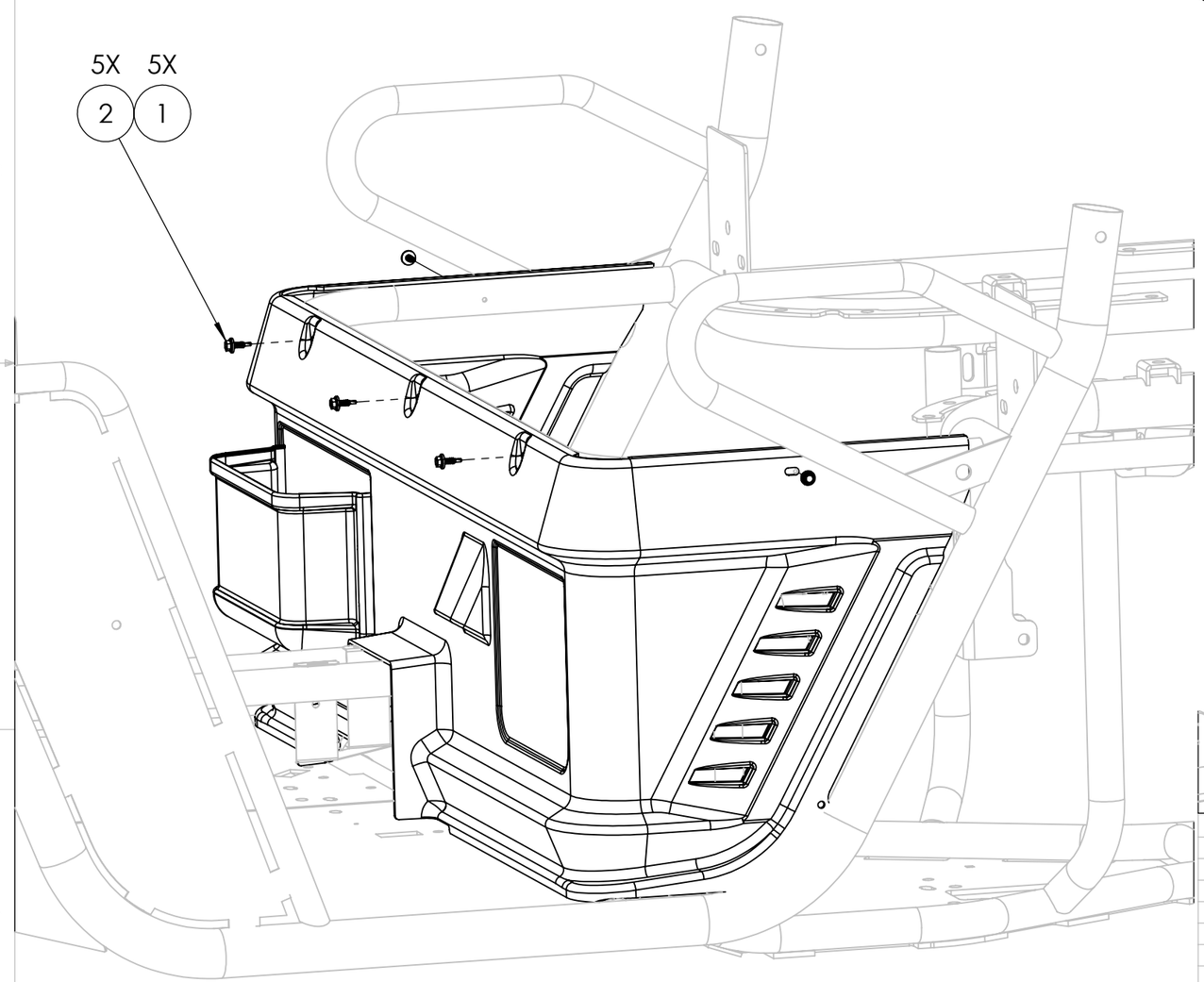

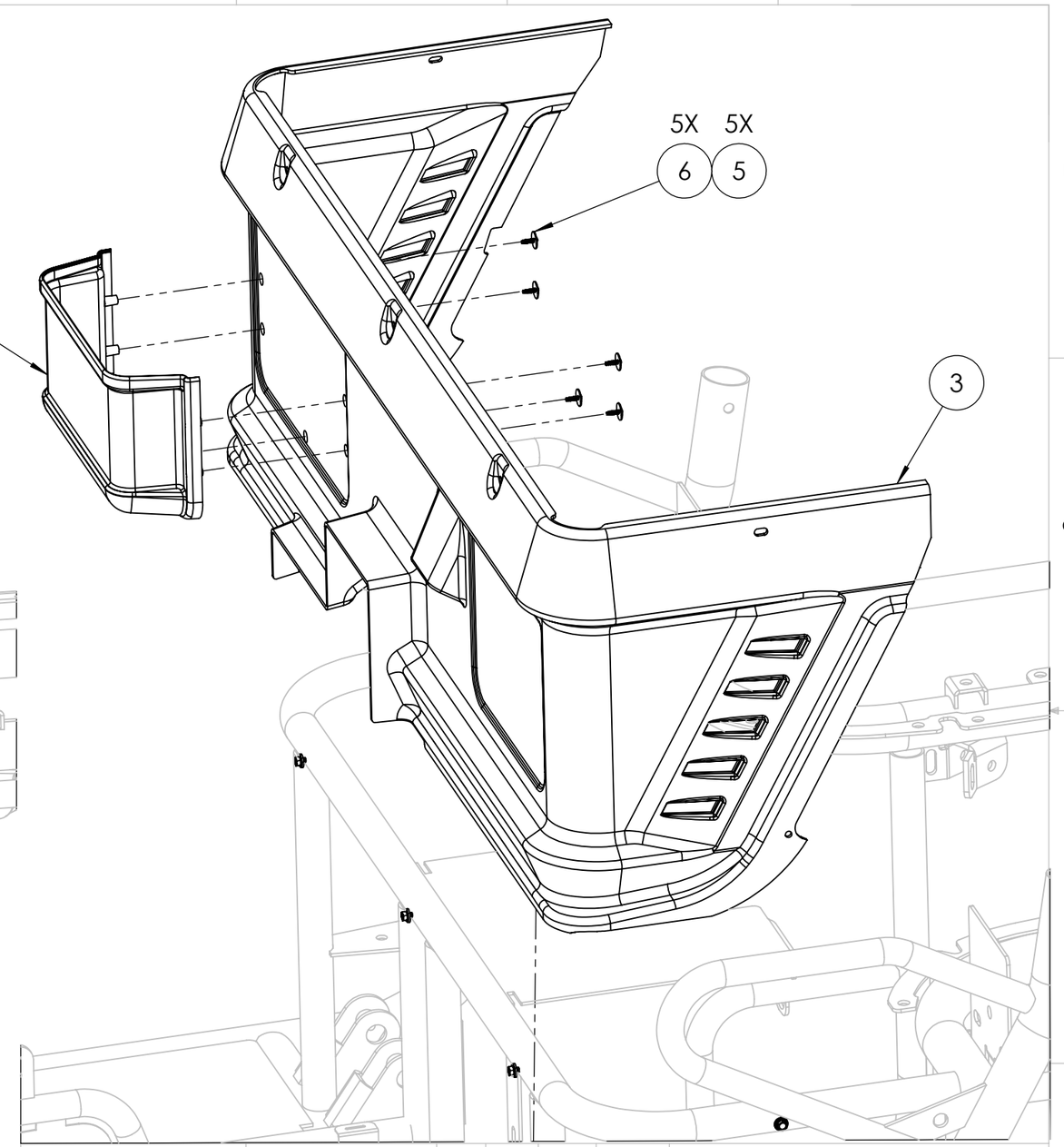

PAINT TABLE

PAINT PER ALM STD 114

PROPRIETARY AND CONFIDENTIAL

THE INFORMATION CONTAINED IN THIS DRAWING IS THE SOLE PROPERTY OF ASW, LLC. ANY REPRODUCTION IN PART OR AS A WHOLE WITHOUT THE WRITTEN PERMISSION OF ASW, LLC IS PROHIBITED.

UNLESS OTHERWISE SPECIFIED:

DIMENSIONS ARE IN INCHES
TOLERANCES:
FRACTIONAL ± 1/16"
ANGULAR: MACH ± 1°
X.X ± 0.05
X.XX ± 0.01 TORQ ±10%
X.XXX ±0.005 BEND ± 2°

INTERPRET GEOMETRIC TOLERANCING PER:

MATERIAL

FINISH

DO NOT SCALE DRAWING

	NAME	DATE
DRAWN		
CHECKED		
ENG APPR.		
MFG APPR.		
Q.A.		

COMMENTS:

AMERICAN LANDMASTER

SEAT SURROUND ASSEMBLY

SIZE	DWG. NO.	REV
B	CA00026	0

SCALE: 1:5 WEIGHT: SHEET 1 OF 1

**** PRINTED VERSIONS OF THIS DOCUMENT FOR REFERENCE ONLY ****

ITEM NO.	PART NUMBER	DESCRIPTION	QTY.
1	18168	PANEL, SEATBACK	1
2	18071	CUSHION, SEAT BOTTOM FORMED	1
3	19535	CUSHION, FORMED SEATBACK	1
4	CP00086-2	BRKT, SEAT MNT - BLK	2
5	2-50087	BOLT, 1/4"-20 X 1"	4
6	18524	SCREW, 1/4-20 X 2.25 FHPMS ZN	5
7	18523	SPACER 0.75OD X 0.50 X 0.25ID LDPE BLK	5

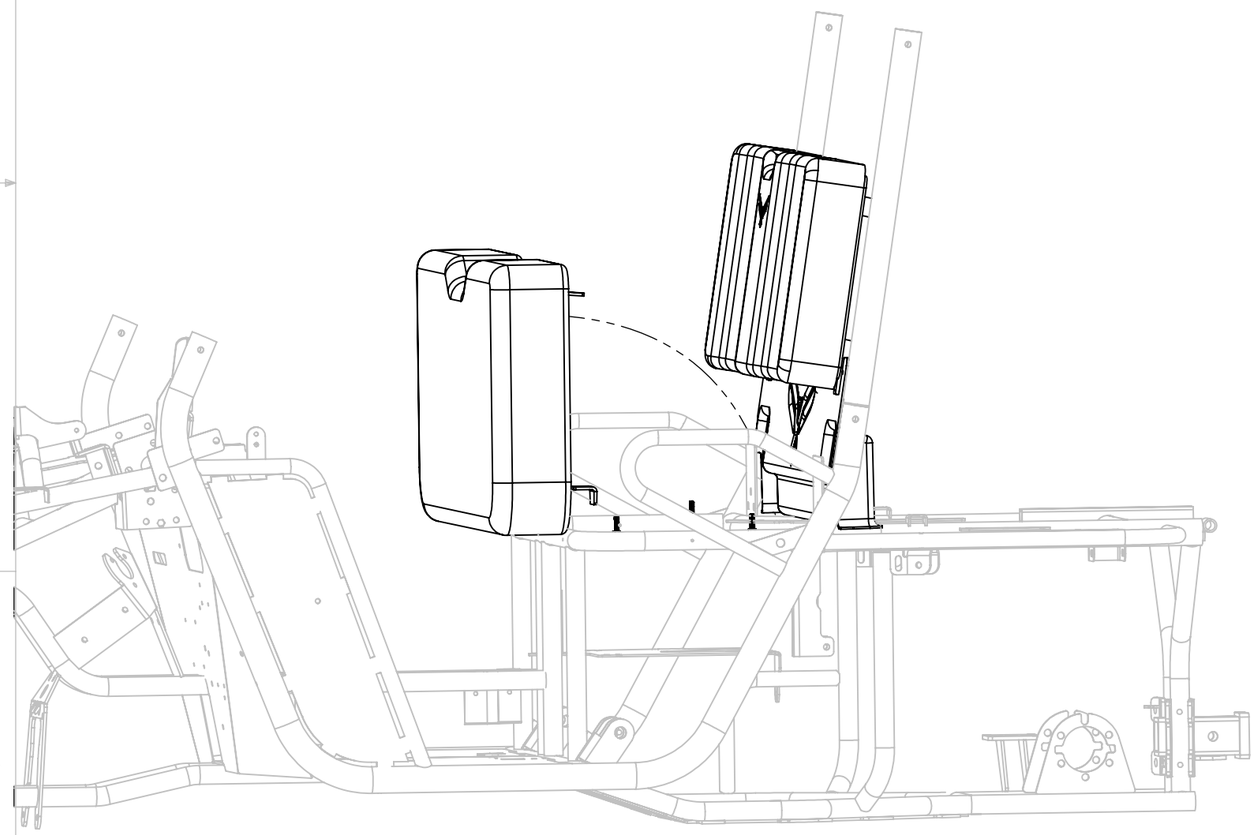

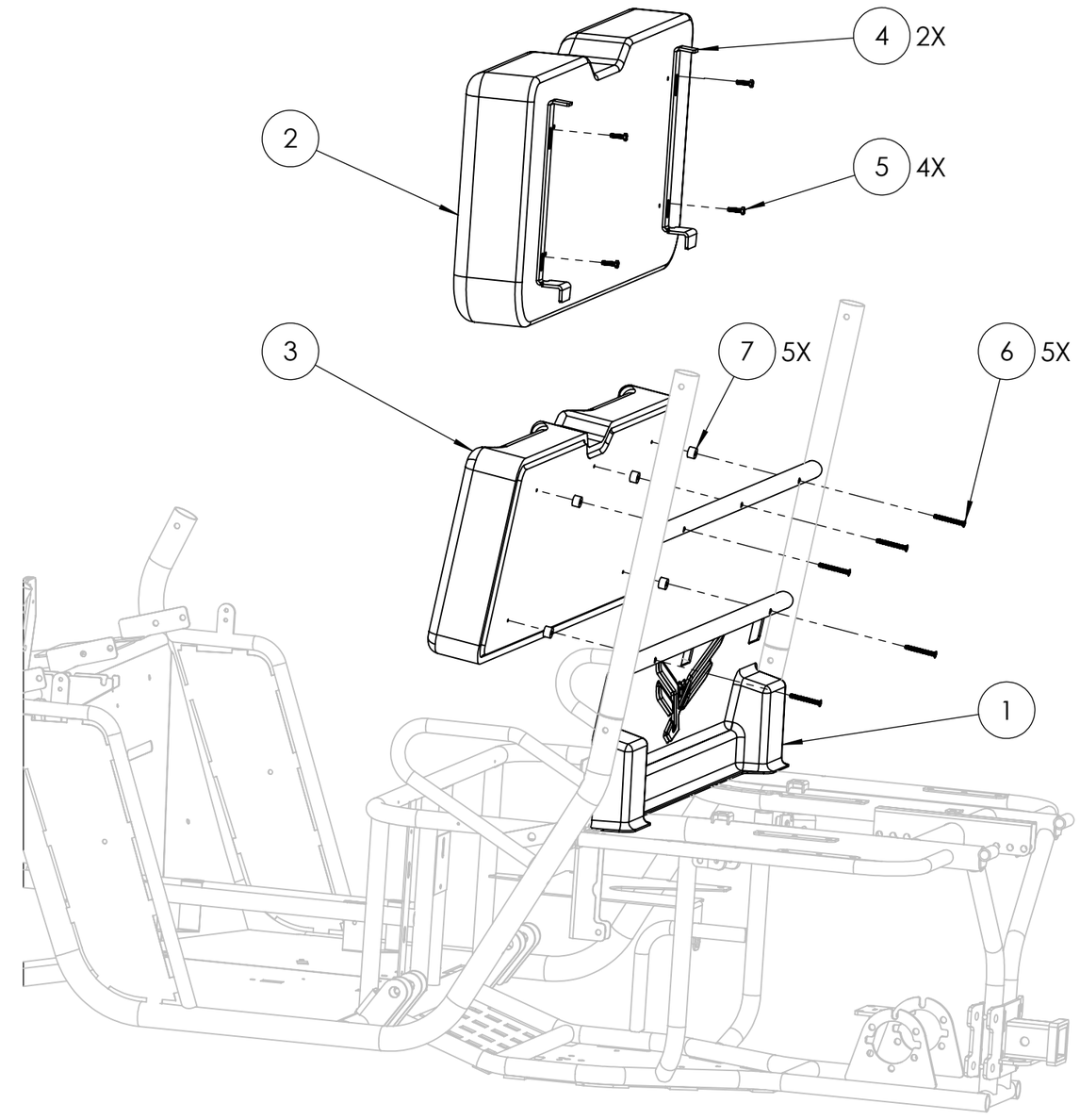

PAINT TABLE

PAINT PER ALM STD 114

PROPRIETARY AND CONFIDENTIAL

THE INFORMATION CONTAINED IN THIS DRAWING IS THE SOLE PROPERTY OF ASW, LLC. ANY REPRODUCTION IN PART OR AS A WHOLE WITHOUT THE WRITTEN PERMISSION OF ASW, LLC IS PROHIBITED.

UNLESS OTHERWISE SPECIFIED:
DIMENSIONS ARE IN INCHES
TOLERANCES:
FRACTIONAL ± 1/16"
ANGULAR: MACH ± 1°
X.X ± 0.05
X.XX ± 0.01 TORQ ± 10%
X.XXX ± 0.005 BEND ± 2°

INTERPRET GEOMETRIC TOLERANCING PER:

MATERIAL

FINISH

DO NOT SCALE DRAWING

	NAME	DATE
DRAWN		
CHECKED		
ENG APPR.		
MFG APPR.		
Q.A.		

COMMENTS:

AMERICAN LANDMASTER

SEAT ASSEMBLY

SIZE	DWG. NO.	REV
B	CA00026	0

SCALE: 1:10 WEIGHT: SHEET 1 OF 1

**** PRINTED VERSIONS OF THIS DOCUMENT FOR REFERENCE ONLY ****

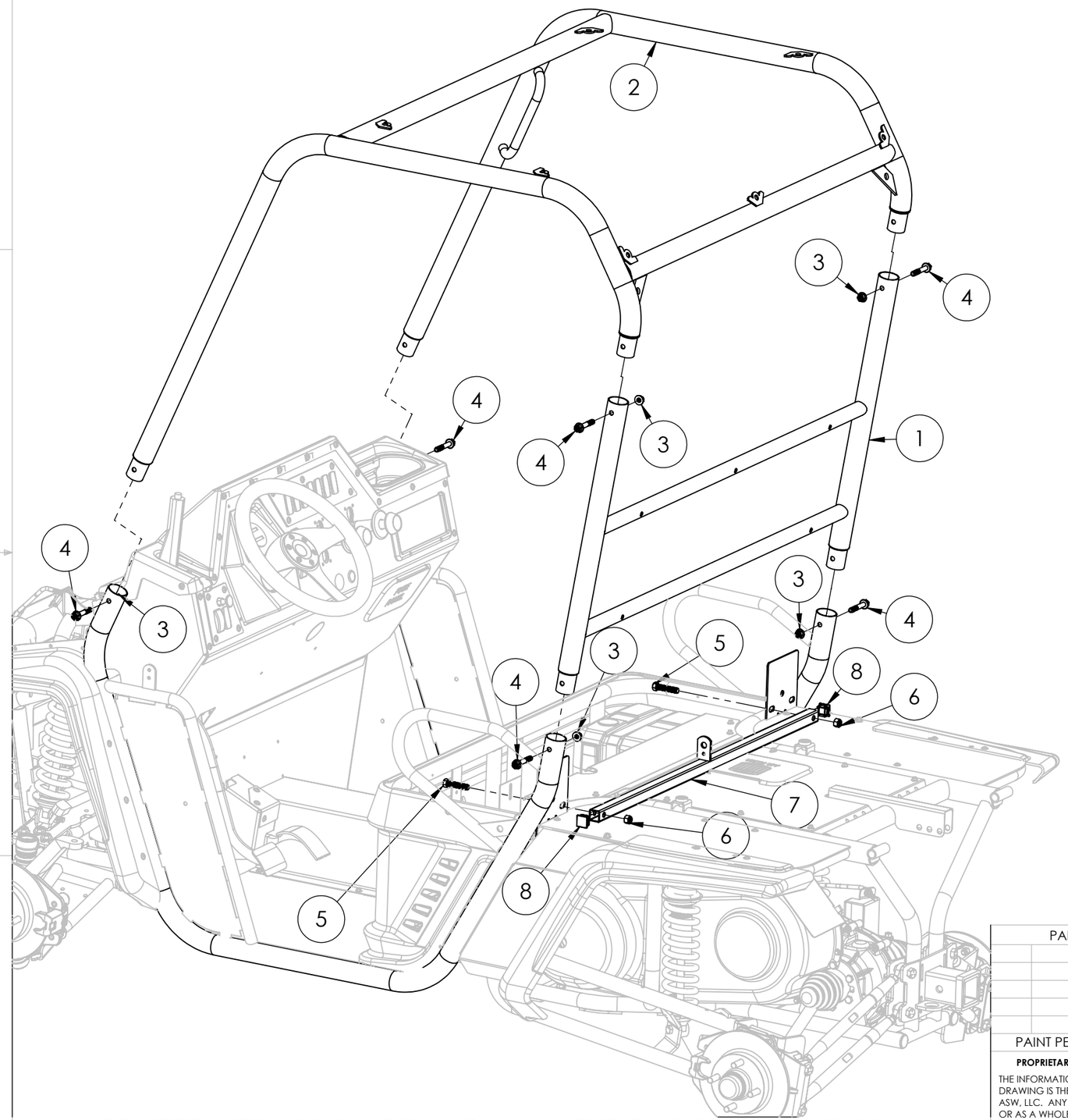

ITEM NO.	PART NUMBER	DESCRIPTION	QTY.
1	18362	WDMT, OH B PILLAR - MY21	1
2	18551	WDMT, OH ROPS MY21	1
3	19019	NUT, 3/8"-16 NYLON INSERT GRADE 5 BLACK FLANGE NYLOCK	6
4	19018	BOLT, 3/8"-16 X 2.25" FLANGE HEAD BLACK GRADE 5	6
5	19133	BOLT, 7/16-20 X 2.00 HHCS GR5 ZN	2
6	2-50025	NUT, 7/16-14 NYLOCK	2
7	18344-2	WDMT, SEAT BELT CROSS TUBE	1
8	18696	CAP, .72in - .84" SQUARE SNAP IN	2

**** PRINTED VERSIONS OF THIS DOCUMENT FOR REFERENCE ONLY ****

PAINT TABLE

PAINT PER ALM STD 114

PROPRIETARY AND CONFIDENTIAL

THE INFORMATION CONTAINED IN THIS DRAWING IS THE SOLE PROPERTY OF ASW, LLC. ANY REPRODUCTION IN PART OR AS A WHOLE WITHOUT THE WRITTEN PERMISSION OF ASW, LLC IS PROHIBITED.

UNLESS OTHERWISE SPECIFIED:
DIMENSIONS ARE IN INCHES
TOLERANCES:
FRACTIONAL ± 1/16"
ANGULAR: MACH ± 1°
X.X ± 0.05
X.XX ± 0.01 TORQ ±10%
X.XXX ±0.005 BEND ± 2°

INTERPRET GEOMETRIC TOLERANCING PER:

MATERIAL

FINISH

DO NOT SCALE DRAWING

	NAME	DATE
DRAWN		
CHECKED	XXX	
ENG APPR.		
MFG APPR.		
Q.A.		

◆ INDICATES CRITICAL DIMENSIONS

COMMENTS:

AMERICAN LANDMASTER

OH BARS ASSEMBLY

SIZE	DWG. NO.	REV
B	CA00026	0

SCALE: 1:50 WEIGHT: SHEET 1 OF 1

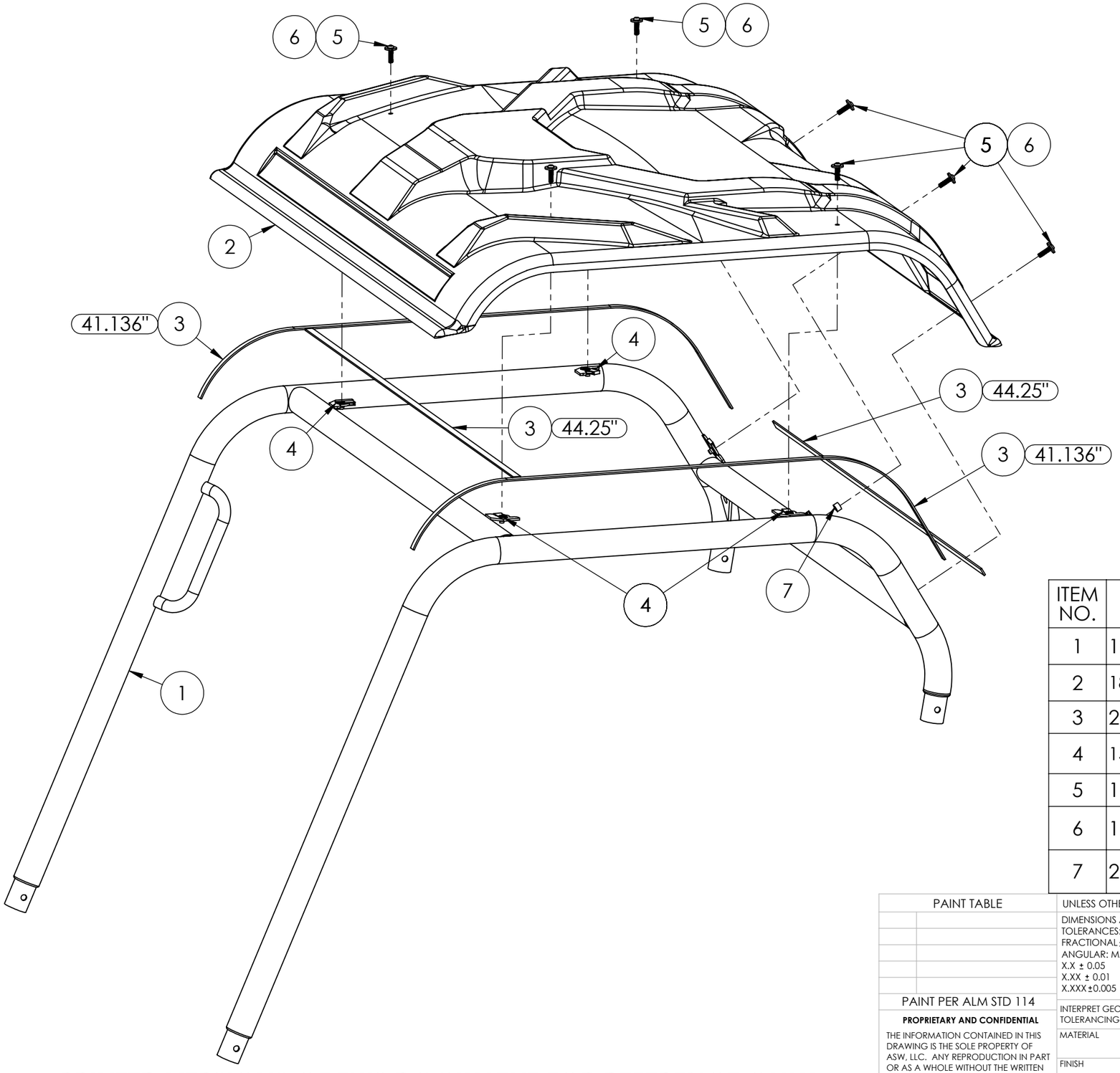

ITEM NO.	PART NUMBER	DESCRIPTION	QTY.
1	18551	WDMT, OH ROPS MY21	1
2	18215	ROOF, POLY BLACK 2021	1
3	2-60006	TAPE, FOAM - 1/4"X 3/4"	.42
4	15823	NUT, CLIP ON TAPPED - M6 X 1.0; 11 GA MA	7
5	17658	SCREW, M6-1.0 X 25 BLACK BHSS	7
6	17659	WASHER, 1/4 X 3/4 FLAT SEALING BLACK	7
7	2-18415	SPACER, 1/2 X 5/16 - BLK PLASTIC	1

PAINT TABLE

PAINT PER ALM STD 114

PROPRIETARY AND CONFIDENTIAL

THE INFORMATION CONTAINED IN THIS DRAWING IS THE SOLE PROPERTY OF ASW, LLC. ANY REPRODUCTION IN PART OR AS A WHOLE WITHOUT THE WRITTEN PERMISSION OF ASW, LLC IS PROHIBITED.

UNLESS OTHERWISE SPECIFIED:
DIMENSIONS ARE IN INCHES
TOLERANCES:
FRACTIONAL ± 1/16"
ANGULAR: MACH ± 1°
X.X ± 0.05
X.XX ± 0.01 TORQ ± 10%
X.XXX ± 0.005 BEND ± 2°

INTERPRET GEOMETRIC TOLERANCING PER:

MATERIAL

FINISH

DO NOT SCALE DRAWING

	NAME	DATE
DRAWN		
CHECKED	XXX	
ENG APPR.		
MFG APPR.		
Q.A.		

◆ INDICATES CRITICAL DIMENSIONS

COMMENTS:

AMERICAN LANDMASTER

ROOF ASSEMBLY

SIZE	DWG. NO.	REV
B	CA00026	0

SCALE: 1:20 WEIGHT: SHEET 1 OF 1

**** PRINTED VERSIONS OF THIS DOCUMENT FOR REFERENCE ONLY ****

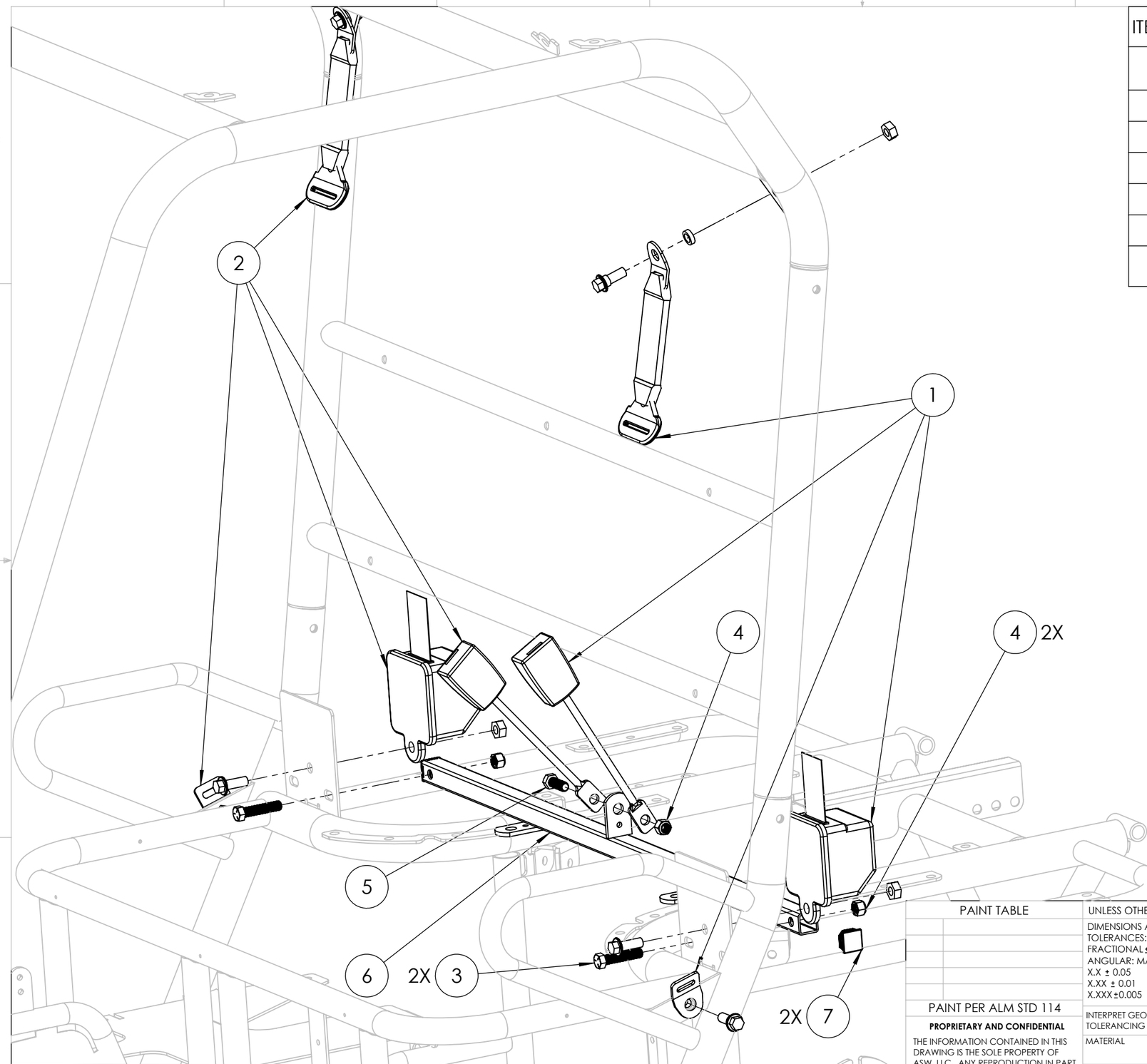

ITEM NO.	PART NUMBER	DESCRIPTION	QTY.
1	19233	SEAT BELT, 3PT W/SHOCK, SENSOR	1
2	19234	SEAT BELT, 3PT W/SHOCK, COVER	1
3	19133	BOLT, 7/16-20 X 2.00 HHCS GR5 ZN	2
4	2-50025	NUT, 7/16-14 NYLOCK	3
5	19138	BOLT, 7/16-14 X 1.25 HHCS ZN GR5	1
6	18344-2	WDMT, SEAT BELT CROSS TUBE	1
7	18696	Polyethylene Square Plug	2

**** PRINTED VERSIONS OF THIS DOCUMENT FOR REFERENCE ONLY ****

PAINT TABLE

PAINT PER ALM STD 114

PROPRIETARY AND CONFIDENTIAL

THE INFORMATION CONTAINED IN THIS DRAWING IS THE SOLE PROPERTY OF ASW, LLC. ANY REPRODUCTION IN PART OR AS A WHOLE WITHOUT THE WRITTEN PERMISSION OF ASW, LLC IS PROHIBITED.

UNLESS OTHERWISE SPECIFIED:
DIMENSIONS ARE IN INCHES
TOLERANCES:
FRACTIONAL ± 1/16"
ANGULAR: MACH ± 1°
X.X ± 0.05
X.XX ± 0.01 TORQ ±10%
X.XXX ±0.005 BEND ± 2°

INTERPRET GEOMETRIC TOLERANCING PER:

MATERIAL

FINISH

DO NOT SCALE DRAWING

	NAME	DATE
DRAWN		
CHECKED		
ENG APPR.		
MFG APPR.		
Q.A.		

COMMENTS:

AMERICAN LANDMASTER

SEATBELT ASSEMBLY

SIZE	DWG. NO.	REV
B	CA00026	0

SCALE: 1:5 WEIGHT: SHEET 1 OF 1

ITEM NO.	PART NUMBER	DESCRIPTION	QTY.
1	18155-1	SKIRT, SIDE LH - RAW	1
2	18156-1	SKIRT, SIDE RH	1
3	18508	PANEL, FENDER TOP LH NO DUMP	1
4	18509	PANEL, FENDER TOP RH	1
5	15823	NUT, CLIP ON TAPPED - M6 X 1.0; 11 GA MA	10
6	18134	SCREW, M6 X 1 X 20 WIDE FLG BUTT HD SS	6
7	16578	BOLT, 5/16"-18 X 3/4 THREAD CUT - HEX	6

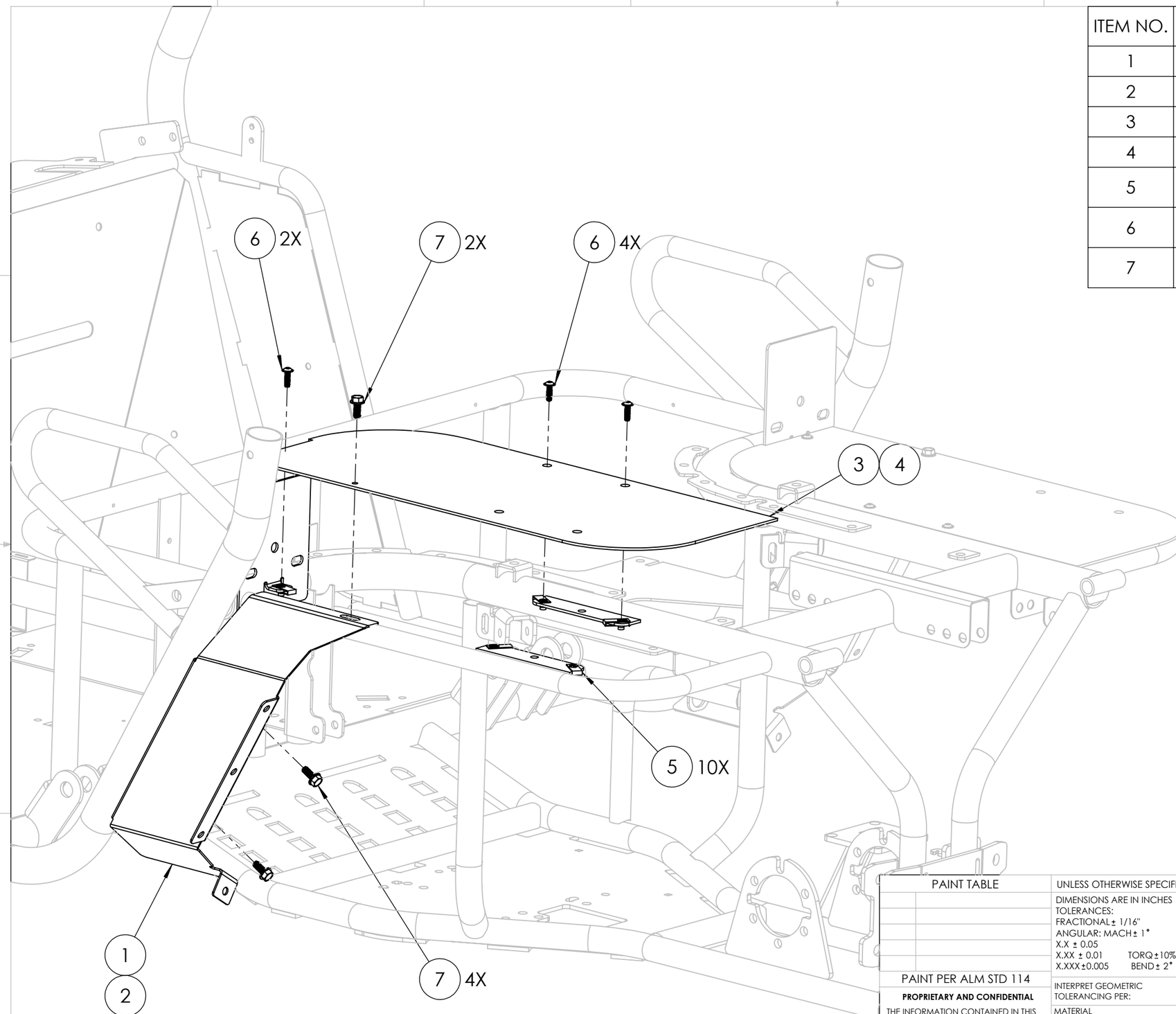

**** PRINTED VERSIONS OF THIS DOCUMENT FOR REFERENCE ONLY ****

PAINT TABLE

PAINT PER ALM STD 114

PROPRIETARY AND CONFIDENTIAL

THE INFORMATION CONTAINED IN THIS DRAWING IS THE SOLE PROPERTY OF ASW, LLC. ANY REPRODUCTION IN PART OR AS A WHOLE WITHOUT THE WRITTEN PERMISSION OF ASW, LLC IS PROHIBITED.

UNLESS OTHERWISE SPECIFIED:

DIMENSIONS ARE IN INCHES
TOLERANCES:
FRACTIONAL ± 1/16"
ANGULAR: MACH ± 1°
X.X ± 0.05
X.XX ± 0.01 TORQ ±10%
X.XXX ±0.005 BEND ± 2°

INTERPRET GEOMETRIC TOLERANCING PER:

MATERIAL

FINISH

DO NOT SCALE DRAWING

	NAME	DATE
DRAWN		
CHECKED		
ENG APPR.		
MFG APPR.		
Q.A.		

COMMENTS:

AMERICAN LANDMASTER

SKIRT AND UPPER FENDER ASSEMBLY

SIZE	DWG. NO.	REV
B	CA00026	0

SCALE: 1:5 | WEIGHT: | SHEET 1 OF 1

ITEM NO.	PART NUMBER	DESCRIPTION	QTY.
1	18212-2	SHIELD, UNDERSEAT - RAW	1
2	2-18413	BED BUMPER 1.5 INCH (RUBBER)	2
3	15823	NUT, CLIP ON TAPPED - M6 X 1.0; 11 GA MA	12
4	14426	BOLT, M6 X 1.0 X 14	12
5	19337	SHIELD, REAR HEAT-L SERIES	1

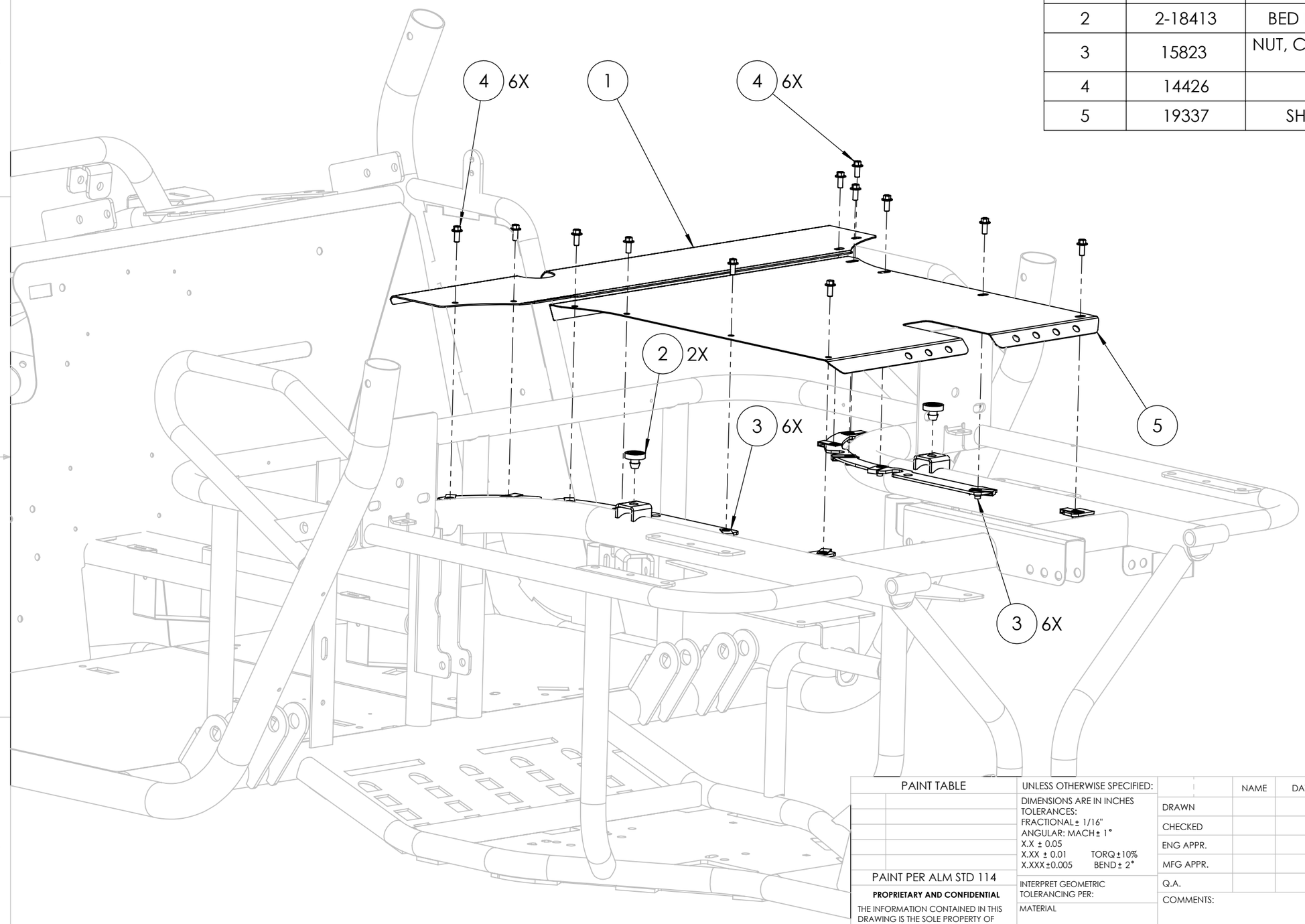

PAINT TABLE

PAINT PER ALM STD 114

PROPRIETARY AND CONFIDENTIAL

THE INFORMATION CONTAINED IN THIS DRAWING IS THE SOLE PROPERTY OF ASW, LLC. ANY REPRODUCTION IN PART OR AS A WHOLE WITHOUT THE WRITTEN PERMISSION OF ASW, LLC IS PROHIBITED.

UNLESS OTHERWISE SPECIFIED:

DIMENSIONS ARE IN INCHES
TOLERANCES:
FRACTIONAL ± 1/16"
ANGULAR: MACH ± 1°
X.X ± 0.05
X.XX ± 0.01 TORQ ±10%
X.XXX ±0.005 BEND ± 2°

INTERPRET GEOMETRIC TOLERANCING PER:

MATERIAL

FINISH

DO NOT SCALE DRAWING

	NAME	DATE
DRAWN		
CHECKED		
ENG APPR.		
MFG APPR.		
Q.A.		

COMMENTS:

AMERICAN LANDMASTER

HEAT SHEILDS ASSEMBLY

SIZE	DWG. NO.	REV
B	CA00026	0

SCALE: 1:5 WEIGHT: SHEET 1 OF 1

**** PRINTED VERSIONS OF THIS DOCUMENT FOR REFERENCE ONLY ****

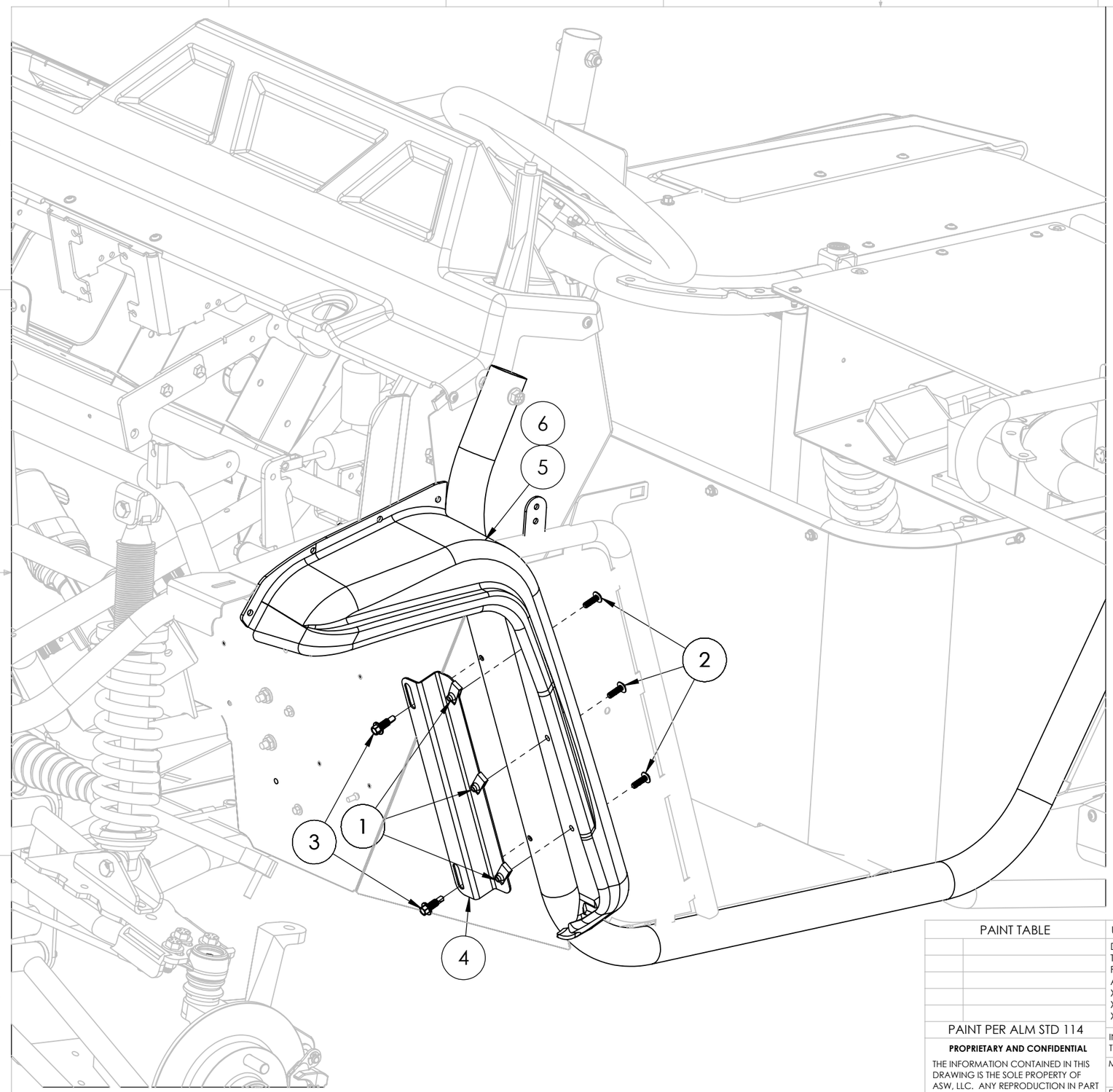

ITEM NO.	PART NUMBER	DESCRIPTION	QTY.
1	15823	NUT, CLIP ON TAPPED - M6 X 1.0; 11 GA MA	6
2	18134	SCREW, M6 X 1 X 20 WIDE FLG BUTT HD SS	6
3	19076	SCREW, 5/16 X1.00 UNSLT HWSDS	4
4	18133-1	BRKT, FRONT FENDER	2
5	18166	FENDER, FRONT LH - 56	1
6	18167	FENDER, FRONT RH - 56	1

**** PRINTED VERSIONS OF THIS DOCUMENT FOR REFERENCE ONLY ****

PAINT TABLE

PAINT PER ALM STD 114

PROPRIETARY AND CONFIDENTIAL

THE INFORMATION CONTAINED IN THIS DRAWING IS THE SOLE PROPERTY OF ASW, LLC. ANY REPRODUCTION IN PART OR AS A WHOLE WITHOUT THE WRITTEN PERMISSION OF ASW, LLC IS PROHIBITED.

UNLESS OTHERWISE SPECIFIED:
DIMENSIONS ARE IN INCHES
TOLERANCES:
FRACTIONAL ± 1/16"
ANGULAR: MACH ± 1°
X.X ± 0.05
X.XX ± 0.01 TORQ ±10%
X.XXX ±0.005 BEND ± 2°

INTERPRET GEOMETRIC TOLERANCING PER:

MATERIAL

FINISH

DO NOT SCALE DRAWING

	NAME	DATE
DRAWN		
CHECKED	XXX	
ENG APPR.		
MFG APPR.		
Q.A.		

◆ INDICATES CRITICAL DIMENSIONS

COMMENTS:

AMERICAN LANDMASTER

FRONT FENDER ASSEMBLY

SIZE	DWG. NO.	REV
B	CA00026	0

SCALE: 1:50 WEIGHT: SHEET 1 OF 1

ITEM NO.	PART NUMBER	DESCRIPTION	QTY.
1	18162	FENDER, REAR LH - 56	1
2	18163	FENDER, REAR RH - 56	1
3	15823	NUT, CLIP ON TAPPED - M6 X 1.0; 11 GA MA	8
4	18134	SCREW, M6 X 1 X 20 WIDE FLG BUTT HD SS	12

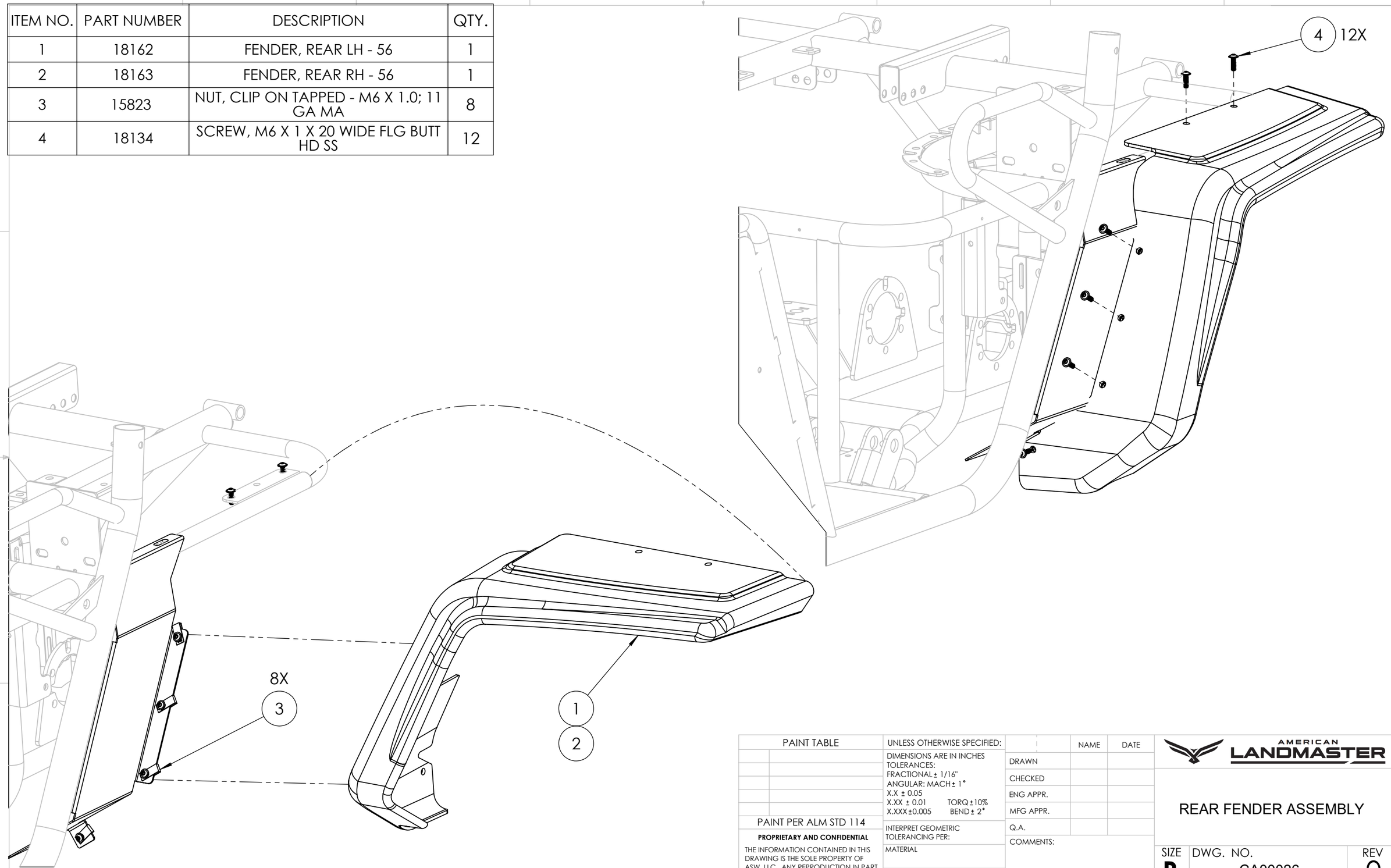

**** PRINTED VERSIONS OF THIS DOCUMENT FOR REFERENCE ONLY ****

PAINT TABLE
PAINT PER ALM STD 114

PROPRIETARY AND CONFIDENTIAL

THE INFORMATION CONTAINED IN THIS DRAWING IS THE SOLE PROPERTY OF ASW, LLC. ANY REPRODUCTION IN PART OR AS A WHOLE WITHOUT THE WRITTEN PERMISSION OF ASW, LLC IS PROHIBITED.

UNLESS OTHERWISE SPECIFIED:

DIMENSIONS ARE IN INCHES
TOLERANCES:
FRACTIONAL ± 1/16"
ANGULAR: MACH ± 1°
X.X ± 0.05
X.XX ± 0.01 TORQ ±10%
X.XXX ±0.005 BEND ± 2°

INTERPRET GEOMETRIC TOLERANCING PER:

MATERIAL

FINISH

DO NOT SCALE DRAWING

	NAME	DATE
DRAWN		
CHECKED		
ENG APPR.		
MFG APPR.		
Q.A.		

COMMENTS:

AMERICAN LANDMASTER

REAR FENDER ASSEMBLY

SIZE	DWG. NO.	REV
B	CA00026	0

SCALE: 1:5 WEIGHT: SHEET 1 OF 1

ITEM NO.	PART NUMBER	DESCRIPTION	QTY.
1	15823	NUT, CLIP ON TAPPED - M6 X 1.0; 11 GA MA	4
2	14426	BOLT, M6 X 1.0 X 14	4
3	19580	BRKT, 4WD TUNNEL	1

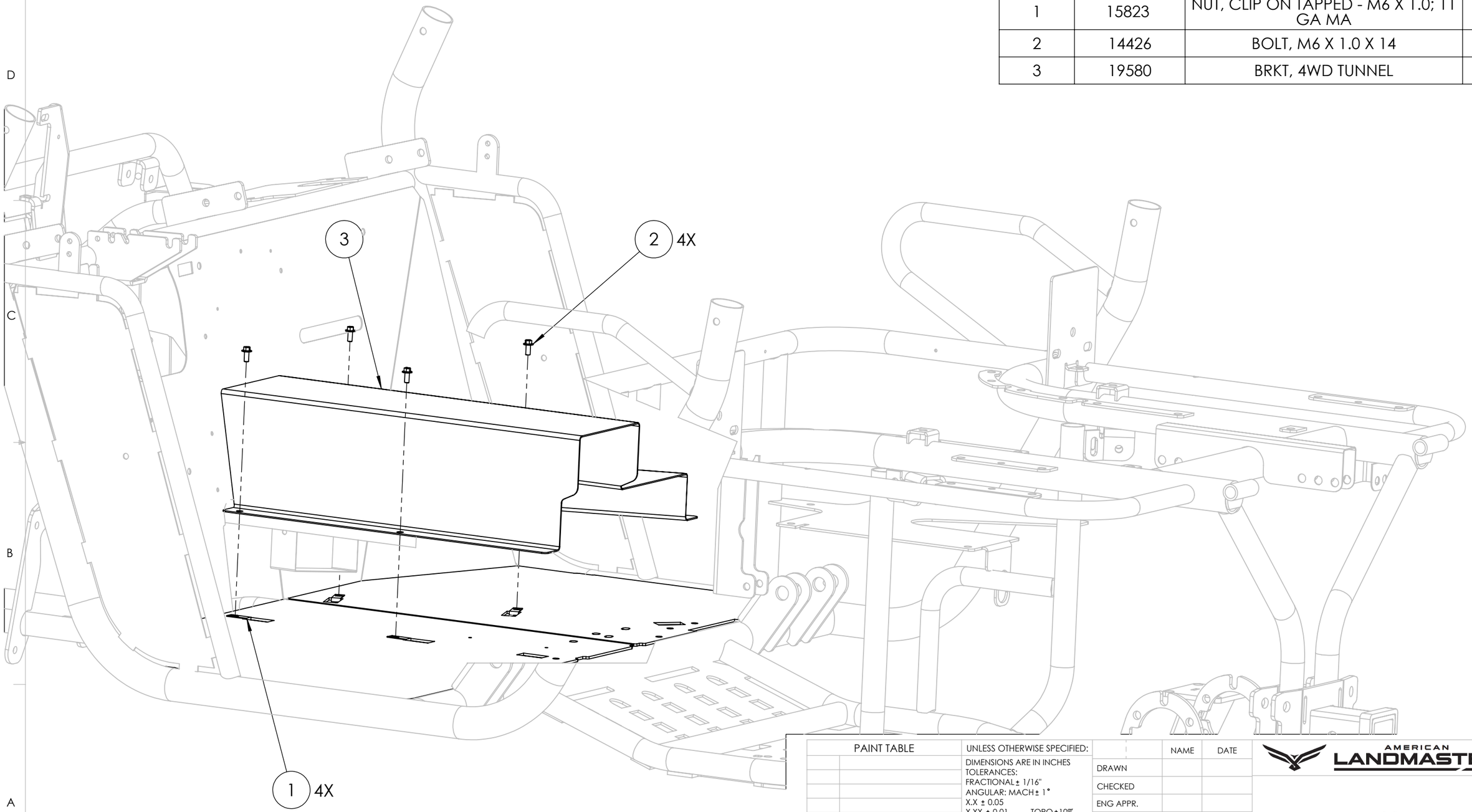

PAINT TABLE

PAINT PER ALM STD 114

PROPRIETARY AND CONFIDENTIAL

THE INFORMATION CONTAINED IN THIS DRAWING IS THE SOLE PROPERTY OF ASW, LLC. ANY REPRODUCTION IN PART OR AS A WHOLE WITHOUT THE WRITTEN PERMISSION OF ASW, LLC IS PROHIBITED.

UNLESS OTHERWISE SPECIFIED:

DIMENSIONS ARE IN INCHES
TOLERANCES:
FRACTIONAL ± 1/16"
ANGULAR: MACH ± 1°
X.X ± 0.05
X.XX ± 0.01 TORQ ± 10%
X.XXX ± 0.005 BEND ± 2°

INTERPRET GEOMETRIC TOLERANCING PER:

MATERIAL

FINISH

DO NOT SCALE DRAWING

	NAME	DATE
DRAWN		
CHECKED		
ENG APPR.		
MFG APPR.		
Q.A.		

COMMENTS:

AMERICAN LANDMASTER

TUNNEL ASSEMBLY

SIZE	DWG. NO.	REV
B	CA00026	0

SCALE: 1:5 WEIGHT: SHEET 1 OF 1

**** PRINTED VERSIONS OF THIS DOCUMENT FOR REFERENCE ONLY ****

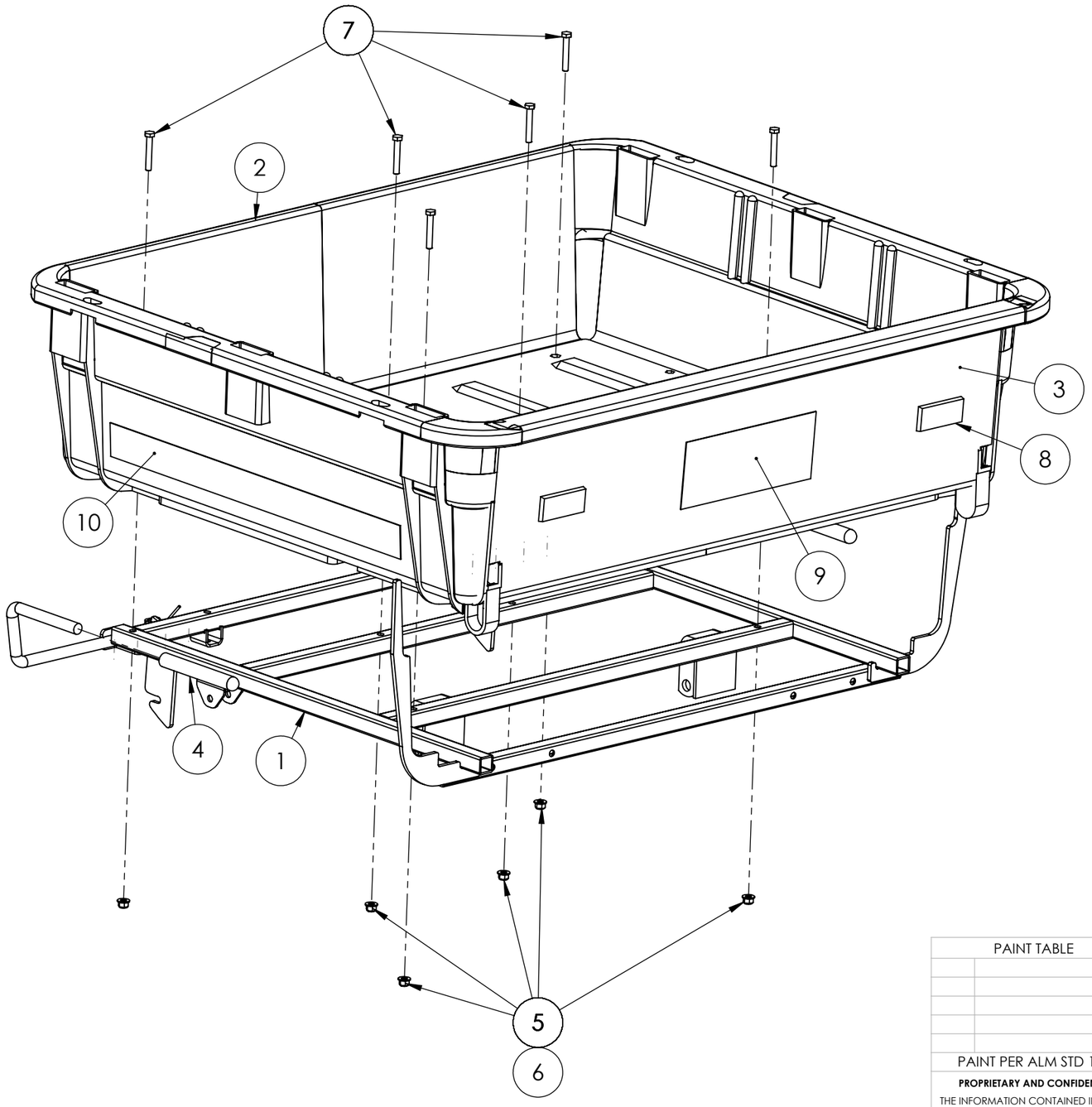

ITEM NO.	PART NUMBER	DESCRIPTION	Default/ QTY.
1	18564-2	WDMT, POLY BED FRAME-BLK	1
2	2-18356	BED, DUMP (STRUC FOAM)	1
3	2-18357	TAILGATE, UTV - DUMP BED STRUC FOAM	1
4	2-70241	RUBBER TUBE, BED LATCH COVER	2
5	2-50007	NUT, 5/16-18 NYLOCK	6
6	2-50701	WASHER, 5/16 SAE FLAT	6
7	2-50167	BOLT, 5/16IN X 2IN HEX HEAD G5	6
8	2-70150	REFLECTOR-UTV #RE10RB (RED)-ADHESIVE BACK	2
9	19972	DECAL, BED REAR, WHITE BIRD	1
10	19971	DECAL, BED SIDE, LANDMASTER	2

**** PRINTED VERSIONS OF THIS DOCUMENT FOR REFERENCE ONLY ****

PAINT TABLE

PAINT PER ALM STD 114

PROPRIETARY AND CONFIDENTIAL

THE INFORMATION CONTAINED IN THIS DRAWING IS THE SOLE PROPERTY OF ASW, LLC. ANY REPRODUCTION IN PART OR AS A WHOLE WITHOUT THE WRITTEN PERMISSION OF ASW, LLC IS PROHIBITED.

UNLESS OTHERWISE SPECIFIED:

DIMENSIONS ARE IN INCHES
TOLERANCES:
FRACTIONAL ± 1/16"
ANGULAR: MACH ± 1°
X.X ± 0.05
X.XX ± 0.01 TORQ ±10%
X.XXX ±0.005 BEND ± 2°

INTERPRET GEOMETRIC TOLERANCING PER:

MATERIAL

FINISH

DO NOT SCALE DRAWING

	NAME	DATE
DRAWN		
CHECKED	XXX	
ENG APPR.		
MFG APPR.		
Q.A.		

◆ INDICATES CRITICAL DIMENSIONS

COMMENTS:

AMERICAN LANDMASTER

POLY BED

SIZE	DWG. NO.	REV
B	CA00026	0

SCALE: 1:20 WEIGHT: SHEET 1 OF 1

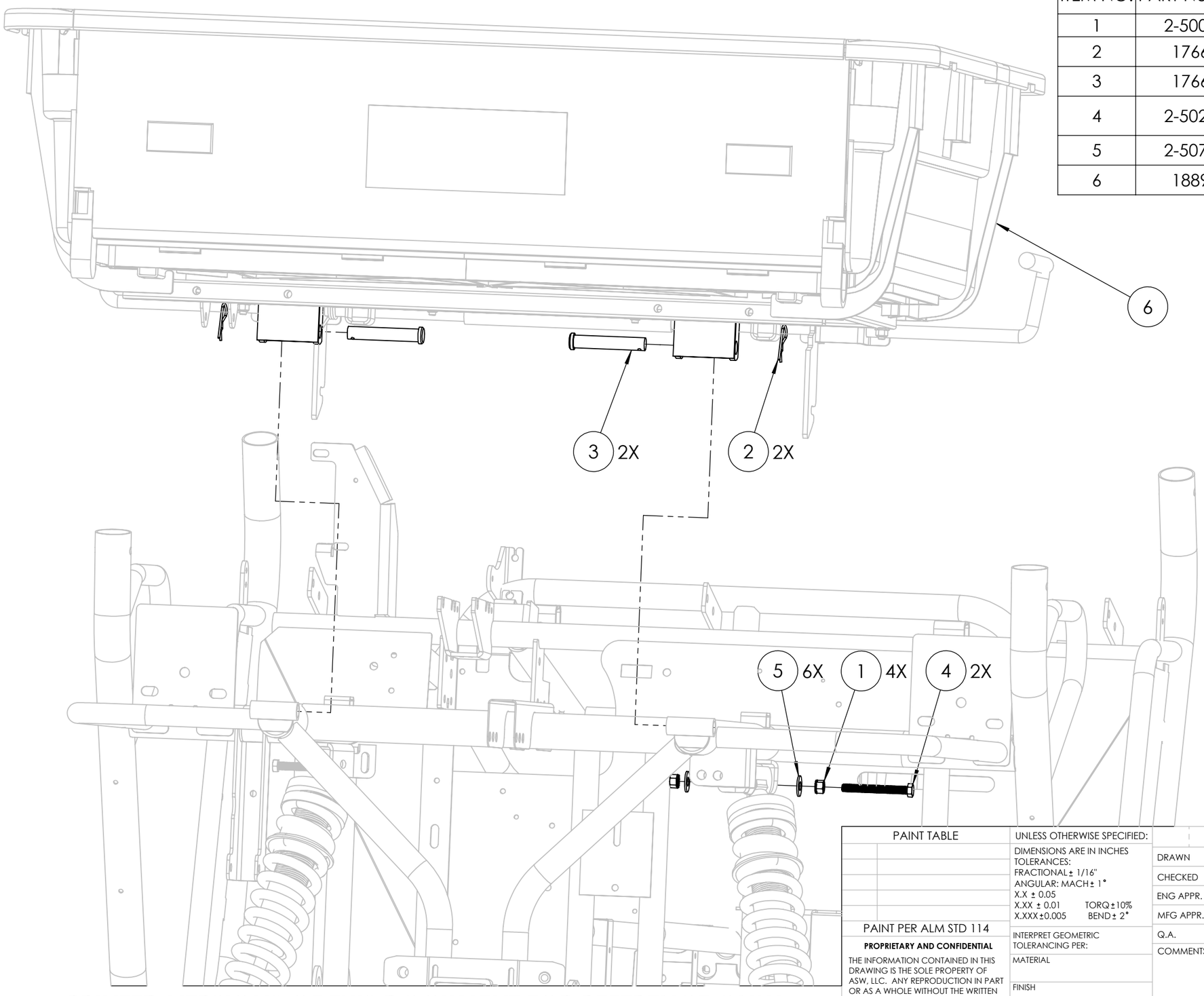

ITEM NO.	PART NUMBER	DESCRIPTION	QTY.
1	2-50013	NUT, 3/8 KEPS	4
2	17660	PIN, BRIDGE .093 - ZINC	2
3	17661	PIN, CLEVIS - 5/8 X 3.50 CLEAR ZINC	2
4	2-50212	BOLT, 3/8IN X 3-1/4IN HEX HEAD G5-ZINC	2
5	2-50740	WASHER, 3/8IN USS FLAT WASHER	6
6	18892	ASM, POLY BED	1

PAINT TABLE

PAINT PER ALM STD 114

PROPRIETARY AND CONFIDENTIAL

THE INFORMATION CONTAINED IN THIS DRAWING IS THE SOLE PROPERTY OF ASW, LLC. ANY REPRODUCTION IN PART OR AS A WHOLE WITHOUT THE WRITTEN PERMISSION OF ASW, LLC IS PROHIBITED.

UNLESS OTHERWISE SPECIFIED:

DIMENSIONS ARE IN INCHES
TOLERANCES:
FRACTIONAL ± 1/16"
ANGULAR: MACH ± 1°
X.X ± 0.05
X.XX ± 0.01 TORQ ± 10%
X.XXX ± 0.005 BEND ± 2°

INTERPRET GEOMETRIC TOLERANCING PER:

MATERIAL

FINISH

DO NOT SCALE DRAWING

	NAME	DATE
DRAWN		
CHECKED		
ENG APPR.		
MFG APPR.		
Q.A.		

COMMENTS:

AMERICAN LANDMASTER

POLY BED ASSEMBLY

SIZE	DWG. NO.	REV
B	CA00026	0

SCALE: 1:5 WEIGHT: SHEET 1 OF 1

**** PRINTED VERSIONS OF THIS DOCUMENT FOR REFERENCE ONLY ****

ITEM NO.	PART NUMBER	DESCRIPTION	QTY.
1	CP00129	WDMT, STEEL BED - FLAT	1
2	CP00136	WDMT, BED REAR CORNER SUPPORT	1
3	CP00139	WDMT, STEEL BED SIDE - LH	1
4	CP00141	WDMT, STEEL BED SIDE - RH	1
5	CP00148	WDMT, STEEL BED TAILGATE	1
6	19018	BOLT, 3/8"-16 X 2.25" FLANGE HEAD BLACK GRADE 5	10
7	2-50208	BOLT, 3/8IN X 2-1/2IN HEX HEAD G5	4
8	2-50740	WASHER, 3/8IN USS FLAT WASHER	4
9	2-50085	BOLT, 1/4IN X 1-1/2IN HEX HEAD G5	4
10	2-50084	BOLT, 1/4"-20 x .75" BLK	4
11	2-50087	BOLT, 1/4"-20 X 1"	2
12	15106	NUT, 1/4-20 NYLOCK	6
13	2-50717	WASHER, 1/4IN SAE FLAT	4
14	18238	LATCH, SPRING BOLT RH	1
15	18239	LATCH, SPRING BOLT LH	1
16	2-18413	BED BUMPER 1.5 INCH (RUBBER)	2
17	CP00150	CAP, 1.00" x 1.50" x 14GA TUBE BLK	6
18	2-70241	RUBBER TUBE, BED LATCH COVER	2
19	CP00149	CABLE, TAILGATE	2
20	19972	DECAL, BED REAR, WHITE BIRD	1
21	2-70150	REFLECTOR-UTV #RE10RB (RED)-ADHESIVE BACK	2
22	19971	DECAL, BED SIDE, LANDMASTER	2

PAINT TABLE

PAINT PER ALM STD 114

PROPRIETARY AND CONFIDENTIAL

THE INFORMATION CONTAINED IN THIS DRAWING IS THE SOLE PROPERTY OF ASW, LLC. ANY REPRODUCTION IN PART OR AS A WHOLE WITHOUT THE WRITTEN PERMISSION OF ASW, LLC IS PROHIBITED.

UNLESS OTHERWISE SPECIFIED:

DIMENSIONS ARE IN INCHES
TOLERANCES:
FRACTIONAL ± 1/16"
ANGULAR: MACH ± 1°
X.X ± 0.05
X.XX ± 0.01 TORQ ±10%
X.XXX ±0.005 BEND ± 2°

INTERPRET GEOMETRIC TOLERANCING PER:

MATERIAL

FINISH

DO NOT SCALE DRAWING

	NAME	DATE
DRAWN		
CHECKED	XXX	
ENG APPR.		
MFG APPR.		
Q.A.		

◆ INDICATES CRITICAL DIMENSIONS

COMMENTS:

AMERICAN LANDMASTER

STEEL BED

SIZE	DWG. NO.	REV
B	CA00026	0

SCALE: 1:20 WEIGHT: SHEET 1 OF 3

**** PRINTED VERSIONS OF THIS DOCUMENT FOR REFERENCE ONLY ****

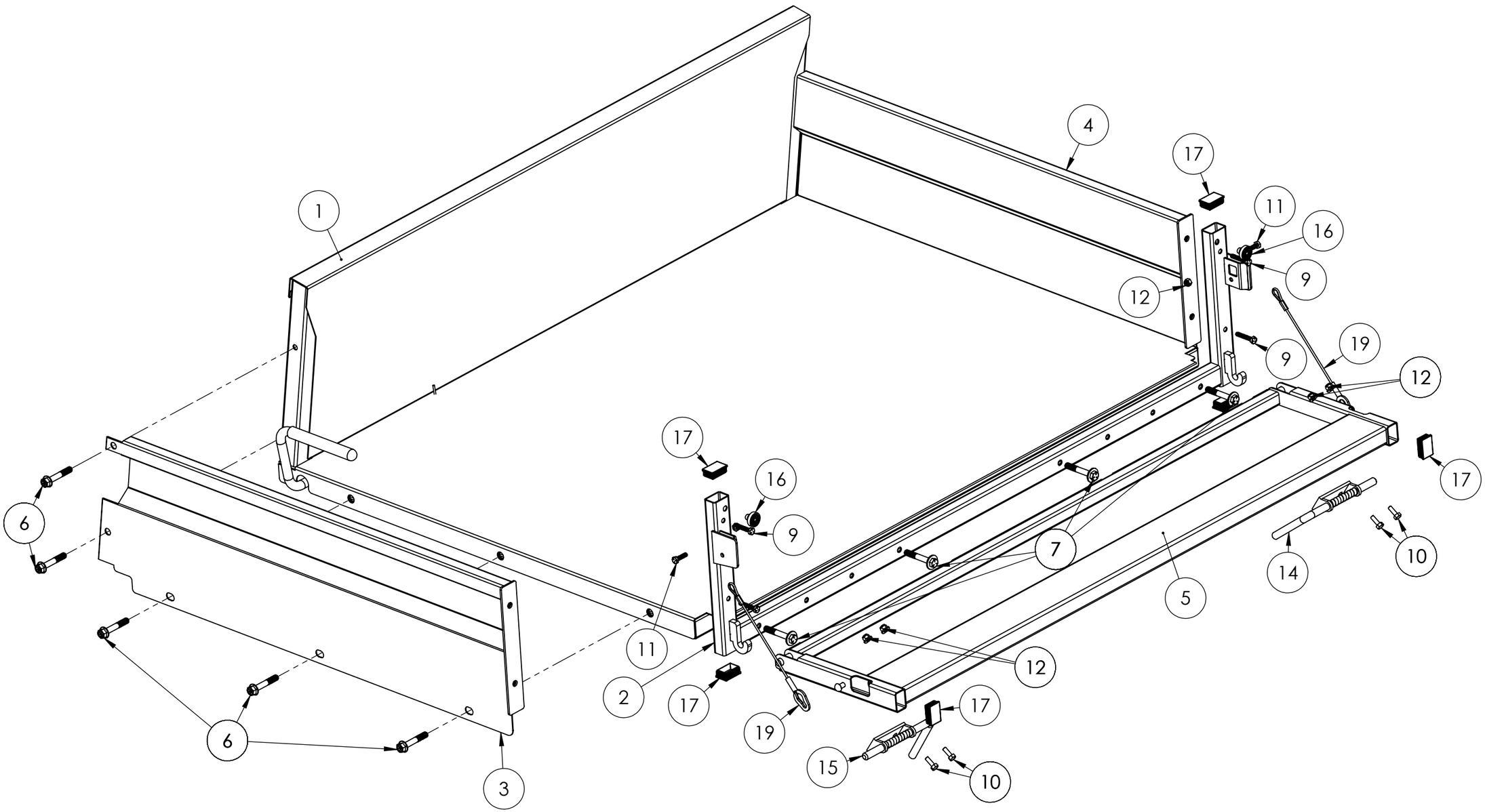

PAINT TABLE	
PAINT PER ALM STD 114	

PROPRIETARY AND CONFIDENTIAL

THE INFORMATION CONTAINED IN THIS DRAWING IS THE SOLE PROPERTY OF ASW, LLC. ANY REPRODUCTION IN PART OR AS A WHOLE WITHOUT THE WRITTEN PERMISSION OF ASW, LLC IS PROHIBITED.

UNLESS OTHERWISE SPECIFIED:

DIMENSIONS ARE IN INCHES
TOLERANCES:
FRACTIONAL ± 1/16"
ANGULAR: MACH ± 1°
X.X ± 0.05
X.XX ± 0.01 TORQ ±10%
X.XXX ±0.005 BEND ± 2°

INTERPRET GEOMETRIC TOLERANCING PER:

MATERIAL

FINISH

DO NOT SCALE DRAWING

	NAME	DATE
DRAWN		
CHECKED	XXX	
ENG APPR.		
MFG APPR.		
Q.A.		

◆ INDICATES CRITICAL DIMENSIONS

COMMENTS:

AMERICAN LANDMASTER

STEEL BED

SIZE	DWG. NO.	REV
B	CA00026	0
SCALE: 1:20	WEIGHT:	SHEET 2 OF 3

**** PRINTED VERSIONS OF THIS DOCUMENT FOR REFERENCE ONLY ****

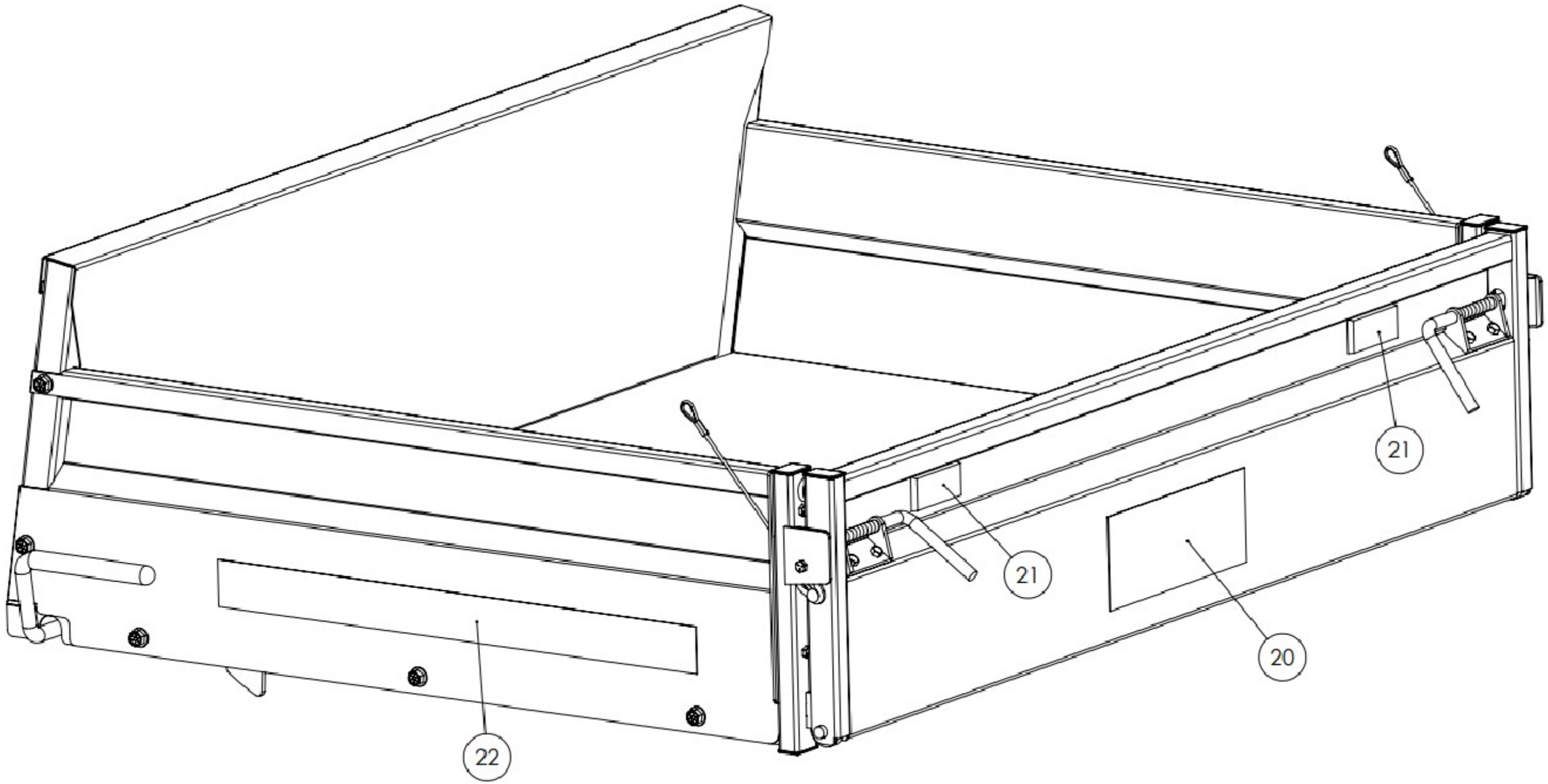

PAINT TABLE	
PAINT PER ALM STD 114	

PROPRIETARY AND CONFIDENTIAL

THE INFORMATION CONTAINED IN THIS DRAWING IS THE SOLE PROPERTY OF ASW, LLC. ANY REPRODUCTION IN PART OR AS A WHOLE WITHOUT THE WRITTEN PERMISSION OF ASW, LLC IS PROHIBITED.

UNLESS OTHERWISE SPECIFIED:

DIMENSIONS ARE IN INCHES
TOLERANCES:
FRACTIONAL ± 1/16"
ANGULAR: MACH ± 1°
X.X ± 0.05
X.XX ± 0.01 TORQ ±10%
X.XXX ±0.005 BEND ± 2°

INTERPRET GEOMETRIC TOLERANCING PER:

MATERIAL

FINISH

DO NOT SCALE DRAWING

	NAME	DATE
DRAWN		
CHECKED	XXX	
ENG APPR.		
MFG APPR.		
Q.A.		

◆ INDICATES CRITICAL DIMENSIONS

COMMENTS:

AMERICAN LANDMASTER

STEEL BED

SIZE	DWG. NO.	REV
B	CA00026	0
SCALE: 1:20	WEIGHT:	SHEET 3 OF 3

**** PRINTED VERSIONS OF THIS DOCUMENT FOR REFERENCE ONLY ****

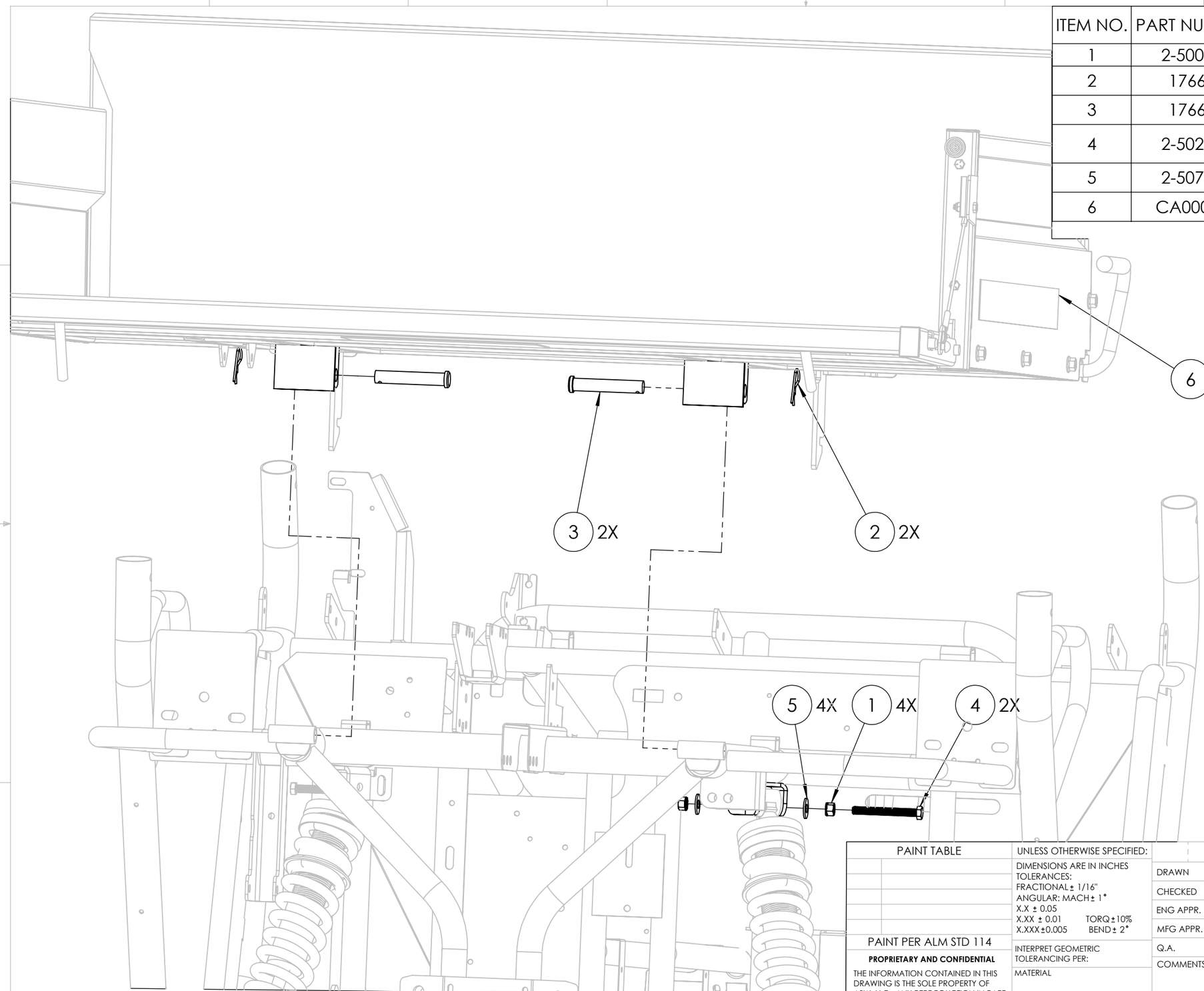

ITEM NO.	PART NUMBER	DESCRIPTION	QTY.
1	2-50013	NUT, 3/8 KEPS	4
2	17660	PIN, BRIDGE .093 - ZINC	2
3	17661	PIN, CLEVIS - 5/8 X 3.50 CLEAR ZINC	2
4	2-50212	BOLT, 3/8IN X 3-1/4IN HEX HEAD G5-ZINC	2
5	2-50740	WASHER, 3/8IN USS FLAT WASHER	4
6	CA00059	BED, CONVERTIBLE STEEL BOX	1

PAINT TABLE

PAINT PER ALM STD 114

PROPRIETARY AND CONFIDENTIAL

THE INFORMATION CONTAINED IN THIS DRAWING IS THE SOLE PROPERTY OF ASW, LLC. ANY REPRODUCTION IN PART OR AS A WHOLE WITHOUT THE WRITTEN PERMISSION OF ASW, LLC IS PROHIBITED.

UNLESS OTHERWISE SPECIFIED:

DIMENSIONS ARE IN INCHES
TOLERANCES:
FRACTIONAL ± 1/16"
ANGULAR: MACH ± 1°
X.X ± 0.05
X.XX ± 0.01 TORQ ±10%
X.XXX ±0.005 BEND ± 2°

INTERPRET GEOMETRIC TOLERANCING PER:

MATERIAL

FINISH

DO NOT SCALE DRAWING

	NAME	DATE
DRAWN		
CHECKED		
ENG APPR.		
MFG APPR.		
Q.A.		

COMMENTS:

AMERICAN LANDMASTER

STEEL BED ASSEMBLY

SIZE	DWG. NO.	REV
B	CA00026	0

SCALE: 1:5 WEIGHT: SHEET 1 OF 1

**** PRINTED VERSIONS OF THIS DOCUMENT FOR REFERENCE ONLY ****