ITEM NO.	PART NUMBER	DESCRIPTION	STATION 1/QTY.
1	2-20020	ENGINE, BRIGGS 479CC VTWIN	1
2	18190-2	WDMT, FRAME IRS STD CHASSIS	1
3	17816	DRIVER, CVT - BLACK DOT - 550	1
4	19718	BELT, - L4/L5 Replaces 18118	1
5	18813-2	PLATE, BACK CV COVER - L5	1
6	18328	HEADER, VAN479 EES	1
7	18796	COVER, FRONT CVT - L5	1
8	18326	MUFFLER, EES NO CATALYST	1
9	18329	ISOLATOR, EES EXH HANGER	2
10	2-50301	BOLT, 7/16IN X 3/4IN HEX HEAD G5	4
11	15823	NUT, CLIP ON TAPPED - M6 X 1.0; 11 GA MA	4
12	14426	BOLT, M6 X 1.0 X 14	4
13	2-50745	WASHER, 1IN ID X 1-1/2IN OD X .1345 THK	1
14	2-50218	BOLT, 3/8"-24 X 4.5" HHCS G5 - PLATED	1
15	2-50742	WASHER, 3/8IN FENDER, 1-1/2" OD	1
16	2-50741	WASHER, 3/8IN LOCK	1
17	2-50704	WASHER, 5/16IN USS FLAT	4
18	2-50159	BOLT, 5/16"-18 x 1.5" HHCS BLK	2
19	2-50167	BOLT, 5/16IN X 2IN HEX HEAD G5	2
20	2-50007	NUT, 5/16-18 NYLOCK	4
21	2-50065	NUT, M10 X 1.5 NYLON LOCKING	2
22	18702	BOLT, M10X1.5 X 60MM HIGH STRENGTH	2
23	19060	KEY, 3/16 X 3/16 X 2 1/2	1

**** PRINTED VERSIONS OF THIS DOCUMENT FOR REFERENCE ONLY ****

PROPRIETARY AND CONFIDENTIAL

THE INFORMATION CONTAINED IN THIS DRAWING IS THE SOLE PROPERTY OF ASW, LLC. ANY REPRODUCTION IN PART OR AS A WHOLE WITHOUT THE WRITTEN PERMISSION OF ASW, LLC IS PROHIBITED.

UNLESS OTHERWISE SPECIFIED:
DIMENSIONS ARE IN INCHES
TOLERANCES:
FRACTIONAL ± 1/16"
ANGULAR: MACH ± 1°
X.X ± 0.05
X.XX ± 0.01
X.XXX ± 0.005 BEND ± 2°

INTERPRET GEOMETRIC TOLERANCING PER:

MATERIAL

FINISH

DO NOT SCALE DRAWING

	NAME	DATE
DRAWN	XXX	xx/xx/xxxx
CHECKED	XXX	
ENG APPR.		
MFG APPR.		
Q.A.		

COMMENTS:

AMERICAN LANDMASTER

SIZE	DWG. NO.	REV
B	18984 MOTOR ASSEMBLY1	0

SCALE: 1:10 WEIGHT: SHEET 1 OF 2

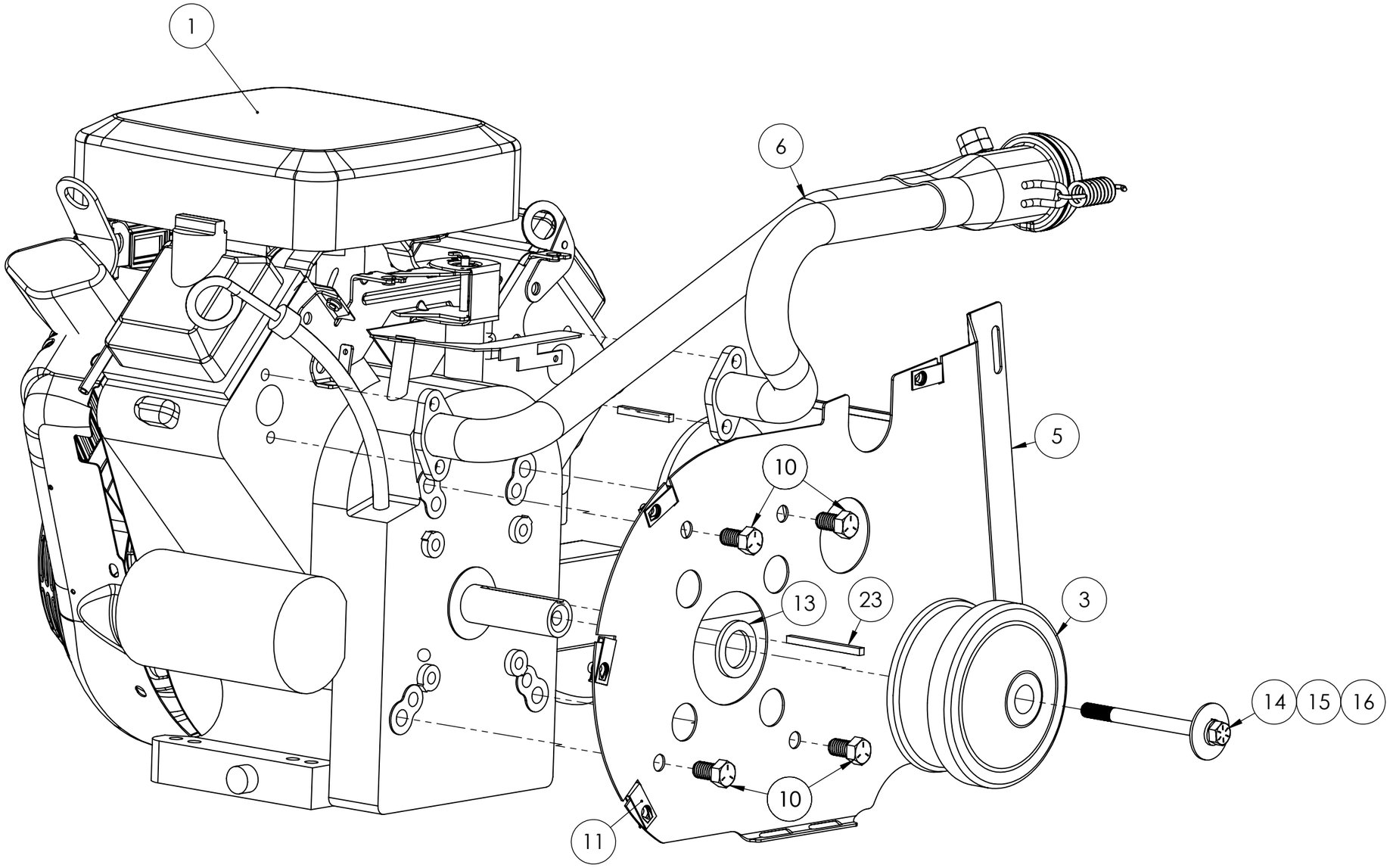

UNLESS OTHERWISE SPECIFIED:		NAME	DATE
DIMENSIONS ARE IN INCHES TOLERANCES: FRACTIONAL ± 1/16" ANGULAR: MACH ± 1° X.X ± 0.05 X.XX ± 0.01 X.XXX ±0.005 BEND ± 2°	DRAWN	XXX	xx/xx/xxxx
	CHECKED	XXX	
	ENG APPR.		
	MFG APPR.		
INTERPRET GEOMETRIC TOLERANCING PER:	Q.A.		
MATERIAL	COMMENTS:		
FINISH			
DO NOT SCALE DRAWING			

AMERICAN LANDMASTER

PROPRIETARY AND CONFIDENTIAL

THE INFORMATION CONTAINED IN THIS DRAWING IS THE SOLE PROPERTY OF ASW, LLC. ANY REPRODUCTION IN PART OR AS A WHOLE WITHOUT THE WRITTEN PERMISSION OF ASW, LLC IS PROHIBITED.

SIZE	DWG. NO.	REV
B	18984 MOTOR ASSEMBLY1	0
SCALE: 1:10	WEIGHT:	SHEET 2 OF 2

**** PRINTED VERSIONS OF THIS DOCUMENT FOR REFERENCE ONLY ****

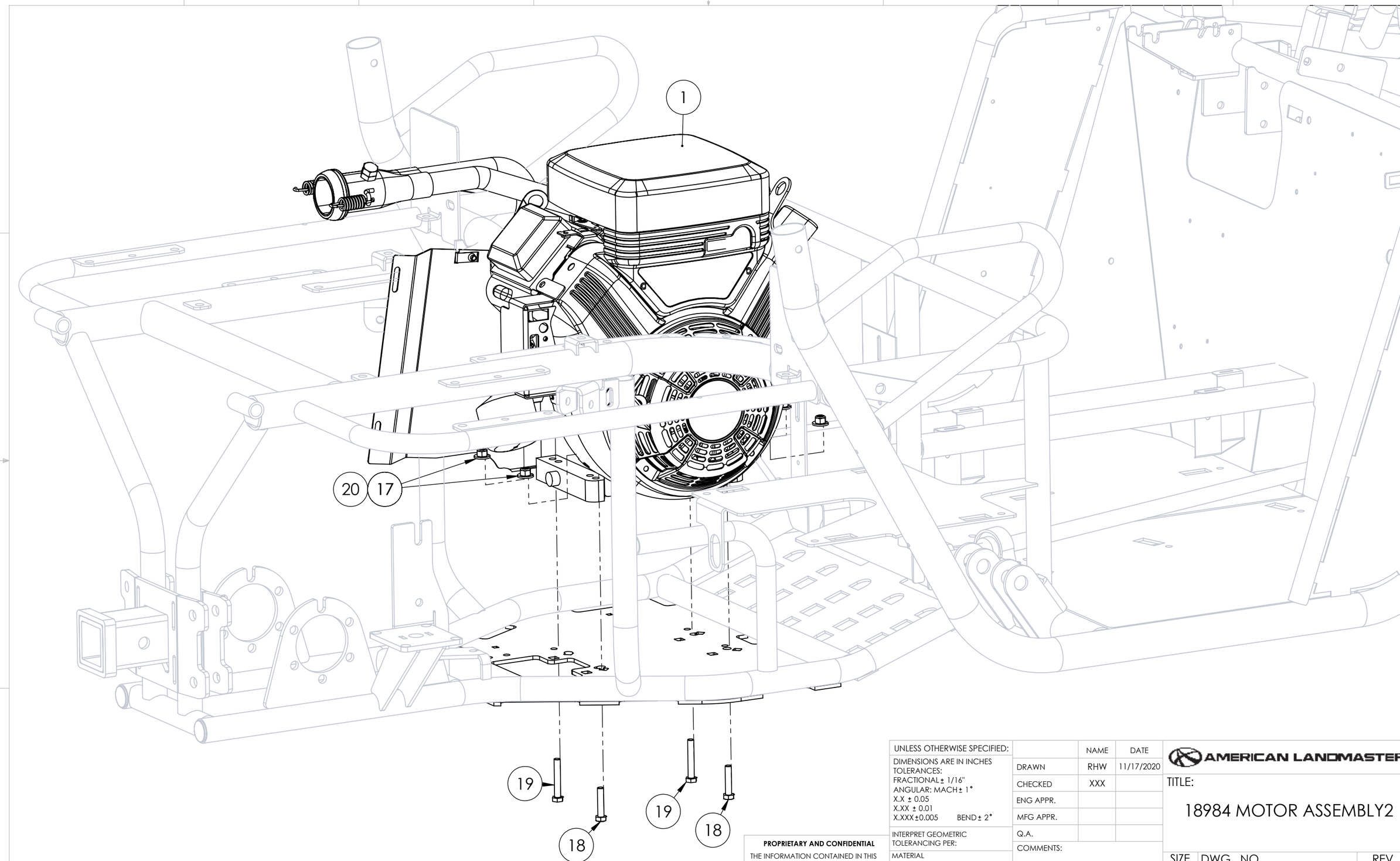

**** PRINTED VERSIONS OF THIS DOCUMENT FOR REFERENCE ONLY ****

PROPRIETARY AND CONFIDENTIAL

THE INFORMATION CONTAINED IN THIS DRAWING IS THE SOLE PROPERTY OF ASW, LLC. ANY REPRODUCTION IN PART OR AS A WHOLE WITHOUT THE WRITTEN PERMISSION OF ASW, LLC IS PROHIBITED.

UNLESS OTHERWISE SPECIFIED:
DIMENSIONS ARE IN INCHES
TOLERANCES:
FRACTIONAL ± 1/16"
ANGULAR: MACH ± 1°
X.X ± 0.05
X.XX ± 0.01
X.XXX ± 0.005 BEND ± 2°

INTERPRET GEOMETRIC TOLERANCING PER:

MATERIAL

FINISH

DO NOT SCALE DRAWING

	NAME	DATE
DRAWN	RHW	11/17/2020
CHECKED	XXX	
ENG APPR.		
MFG APPR.		
Q.A.		

COMMENTS:

AMERICAN LANDMASTER

TITLE:

18984 MOTOR ASSEMBLY2

SIZE	DWG. NO.	REV
B	18984 MOTOR ASSEMBLY2	0

SCALE: 1:50 WEIGHT: SHEET 1 OF 1

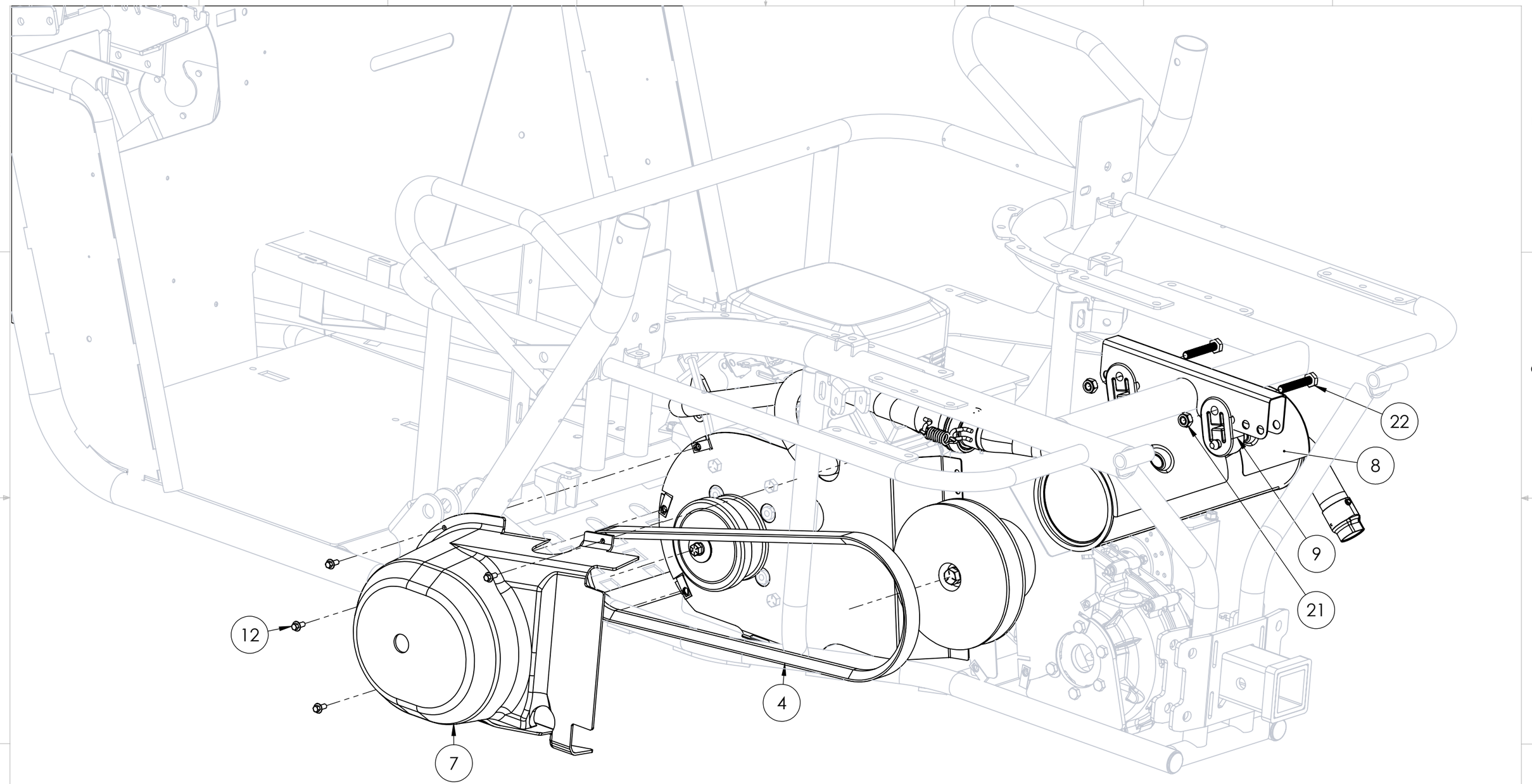

UNLESS OTHERWISE SPECIFIED:		NAME	DATE
DIMENSIONS ARE IN INCHES TOLERANCES: FRACTIONAL ± 1/16" ANGULAR: MACH ± 1° X.X ± 0.05 X.XX ± 0.01 X.XXX ±0.005 BEND ± 2°	DRAWN	RHW	11/18/2020
	CHECKED	XXX	
	ENG APPR.		
	MFG APPR.		
INTERPRET GEOMETRIC TOLERANCING PER:	Q.A.		
MATERIAL	COMMENTS:		
FINISH			
DO NOT SCALE DRAWING			

AMERICAN LANDMASTER

TITLE:

18984 MOTOR ASSEMBLY3

SIZE	DWG. NO.	REV
B	18984 MOTOR ASSEMBLY3	0
SCALE: 1:50	WEIGHT:	SHEET 1 OF 1

PROPRIETARY AND CONFIDENTIAL

THE INFORMATION CONTAINED IN THIS DRAWING IS THE SOLE PROPERTY OF ASW, LLC. ANY REPRODUCTION IN PART OR AS A WHOLE WITHOUT THE WRITTEN PERMISSION OF ASW, LLC IS PROHIBITED.

**** PRINTED VERSIONS OF THIS DOCUMENT FOR REFERENCE ONLY ****

ITEM NO.	PART NUMBER	DESCRIPTION	STATION 1/QTY.
1	18190-2	WDMT, FRAME IRS STD CHASSIS	1
2	17923	HUB, 4WD COUPLER / ROTOR MOUNT	1
3	17986	CALIPER, MECHANICAL AUSCO	1
4	18080	DISC, FRONT BRAKE - 7150	1
5	18795-2	PLATE, BACK CVT REAR - RAW	1
6	18057	AXLE, TRANSAXLE IRS 13.25:1	1
7	16830	SPACER, TRANSAXLE SHIFTER INPUT	1
8	16623	BRACKET, SHIFTER INPUT	1
9	16541	DRIVEN, CVT - 4X2	1
10	18901	COVER, CVT REAR	1
11	2-25004	4X4, RIGHT ANGLE GEAR BOX	1
12	18123	BRKT, DIFF LOCK 4WD	1
13	2-25010	4X4, DRIVE SHAFT BEARING-PILLOW BLOCK ST	1
14	16430	SHAFT, CV DRIVE - FRONT 36.5" OAL	1
15	2-25016	4X4, CV DRIVE SHAFT -REAR (SEE SPECS)	1
16	18697	CAP, ID .96" - 1.07" SNAP IN	2
17	19108	BRKT, HEAT SHIELD - L5/L7	1
18	19003	BOLT. 3/8 - 16 X 2.75IN	5
19	2-50206	BOLT, 3/8-16 X 1 HEX HEAD G5	5
20	19005	SCREW, SET 3/8-16 X 0.50 CUP POINT / PATCH LOK	2
21	2-50084	BOLT, 1/4"-20 x .75" BLK	3
22	15823	NUT, CLIP ON TAPPED - M6 X 1.0; 11 GA MA	4
23	16868	NUT, M12 X 1.25 INTERFERENCE TOP LOCK	1
24	2-50239	BOLT, 1/2"-20 X 2" HH G5 FT	1
25	2-50722	WASHER, 1/2IN LOCK WASHER	1
26	2-50747	WASHER, 0.515IN X 1.25IN X 0.125IN	1

ITEM NO.	PART NUMBER	DESCRIPTION	STATION 1/QTY.
27	14426	BOLT, M6 X 1.0 X 14	6
28	2-50001	NUT, 1/4-20 NYLON LOCKING	3
29	19005	SCREW, SET 3/8-16 X 0.50 CUP POINT	2
30	2-50100	BOLT, SERRATED 5/16" - 18 X 3/4"	8
31	2-50005	NUT, 5/16-18 KEPS	6
32	14236	NUT, M6 X 1.00 NYLOC ZN	2
33	15264	KEY, 3/16 X 3/16 X 1.75	1
34	2-10191	KEYSTOCK, 3/16 X 3/16 X 3-1/4-CVT DRIVEN	1
35	2-10184	KEY STOCK, 3/16IN X 1IN	2

**** PRINTED VERSIONS OF THIS DOCUMENT FOR REFERENCE ONLY ****

PROPRIETARY AND CONFIDENTIAL

THE INFORMATION CONTAINED IN THIS DRAWING IS THE SOLE PROPERTY OF ASW, LLC. ANY REPRODUCTION IN PART OR AS A WHOLE WITHOUT THE WRITTEN PERMISSION OF ASW, LLC IS PROHIBITED.

UNLESS OTHERWISE SPECIFIED:
DIMENSIONS ARE IN INCHES
TOLERANCES:
FRACTIONAL ± 1/16"
ANGULAR: MACH ± 1°
X.X ± 0.05
X.XX ± 0.01
X.XXX ± 0.005 BEND ± 2°

INTERPRET GEOMETRIC TOLERANCING PER:

MATERIAL

FINISH

DO NOT SCALE DRAWING

	NAME	DATE
DRAWN	RHW	11/12/2020
CHECKED	XXX	
ENG APPR.		
MFG APPR.		
Q.A.		

COMMENTS:

AMERICAN LANDMASTER

TITLE:

18984 TRANSAXLE ASSEMBLY

SIZE	DWG. NO.	REV
B	18984 TRANSAXLE ASSEMBLY1	0

SCALE: 1:50 WEIGHT: SHEET 1 OF 2

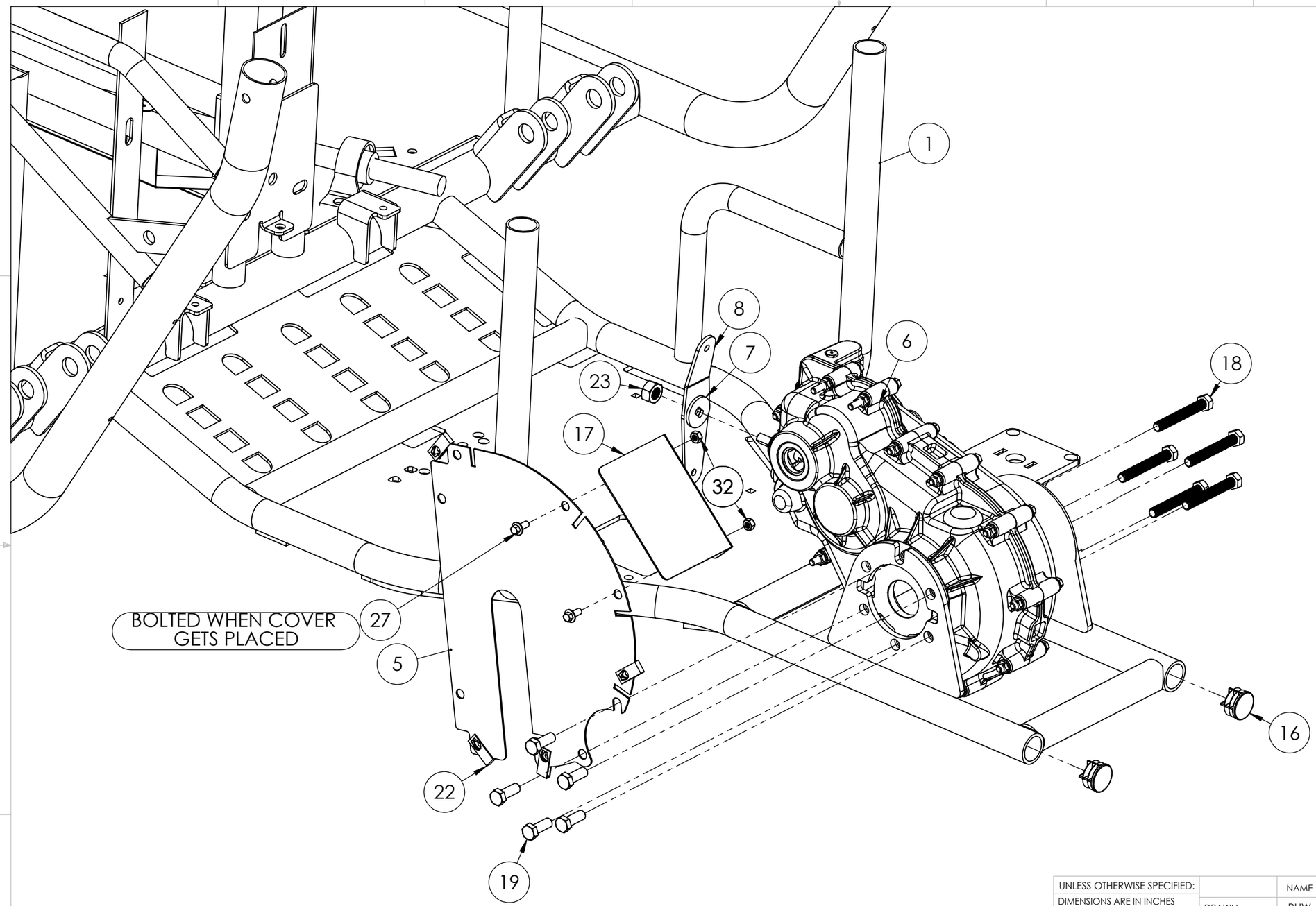

PROPRIETARY AND CONFIDENTIAL

THE INFORMATION CONTAINED IN THIS DRAWING IS THE SOLE PROPERTY OF ASW, LLC. ANY REPRODUCTION IN PART OR AS A WHOLE WITHOUT THE WRITTEN PERMISSION OF ASW, LLC IS PROHIBITED.

UNLESS OTHERWISE SPECIFIED:		NAME	DATE
DIMENSIONS ARE IN INCHES TOLERANCES: FRACTIONAL ± 1/16" ANGULAR: MACH ± 1° X.X ± 0.05 X.XX ± 0.01 X.XXX ± 0.005 BEND ± 2°	DRAWN	RHW	11/12/2020
	CHECKED	XXX	
	ENG APPR.		
	MFG APPR.		
INTERPRET GEOMETRIC TOLERANCING PER:	Q.A.		
MATERIAL	COMMENTS:		
FINISH			
DO NOT SCALE DRAWING			

AMERICAN LANDMASTER

TITLE:

18984 TRANSAXLE ASSEMBLY

SIZE	DWG. NO.	REV
B	18984 TRANSAXLE ASSEMBLY1	0
SCALE: 1:50	WEIGHT:	SHEET 2 OF 2

**** PRINTED VERSIONS OF THIS DOCUMENT FOR REFERENCE ONLY ****

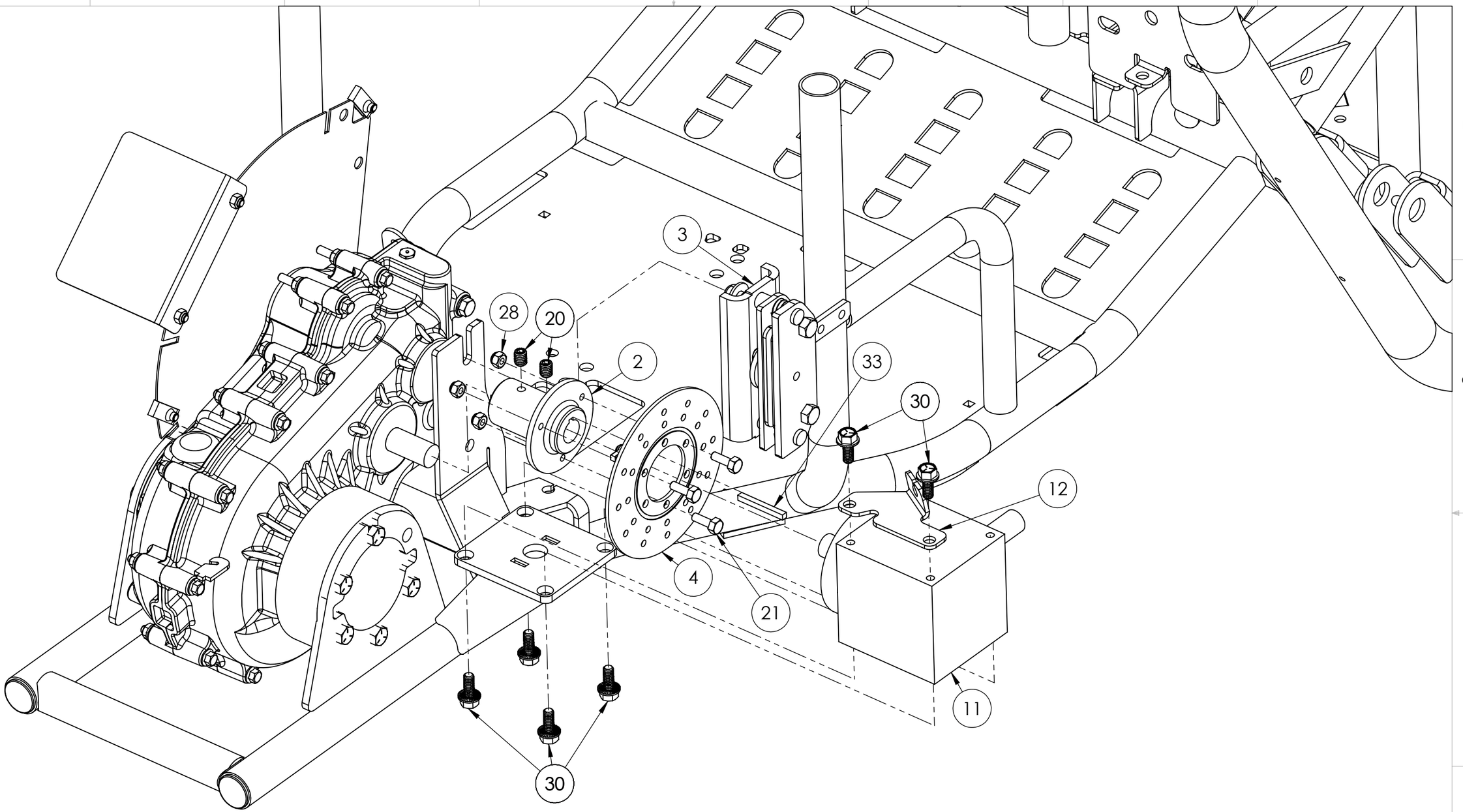

**** PRINTED VERSIONS OF THIS DOCUMENT FOR REFERENCE ONLY ****

PROPRIETARY AND CONFIDENTIAL

THE INFORMATION CONTAINED IN THIS DRAWING IS THE SOLE PROPERTY OF ASW, LLC. ANY REPRODUCTION IN PART OR AS A WHOLE WITHOUT THE WRITTEN PERMISSION OF ASW, LLC IS PROHIBITED.

UNLESS OTHERWISE SPECIFIED:
DIMENSIONS ARE IN INCHES
TOLERANCES:
FRACTIONAL ± 1/16"
ANGULAR: MACH ± 1°
X.X ± 0.05
X.XX ± 0.01
X.XXX ± 0.005 BEND ± 2°

INTERPRET GEOMETRIC TOLERANCING PER:

MATERIAL

FINISH

DO NOT SCALE DRAWING

	NAME	DATE
DRAWN	RHW	11/12/2020
CHECKED	XXX	
ENG APPR.		
MFG APPR.		
Q.A.		

COMMENTS:

AMERICAN LANDMASTER

TITLE:

18984 PASS SIDE TRANSAXLE ASSEMBLY

SIZE	DWG. NO.	REV
B	18984 TRANSAXLE ASSEMBLY2	0

SCALE: 1:50 WEIGHT: SHEET 1 OF 1

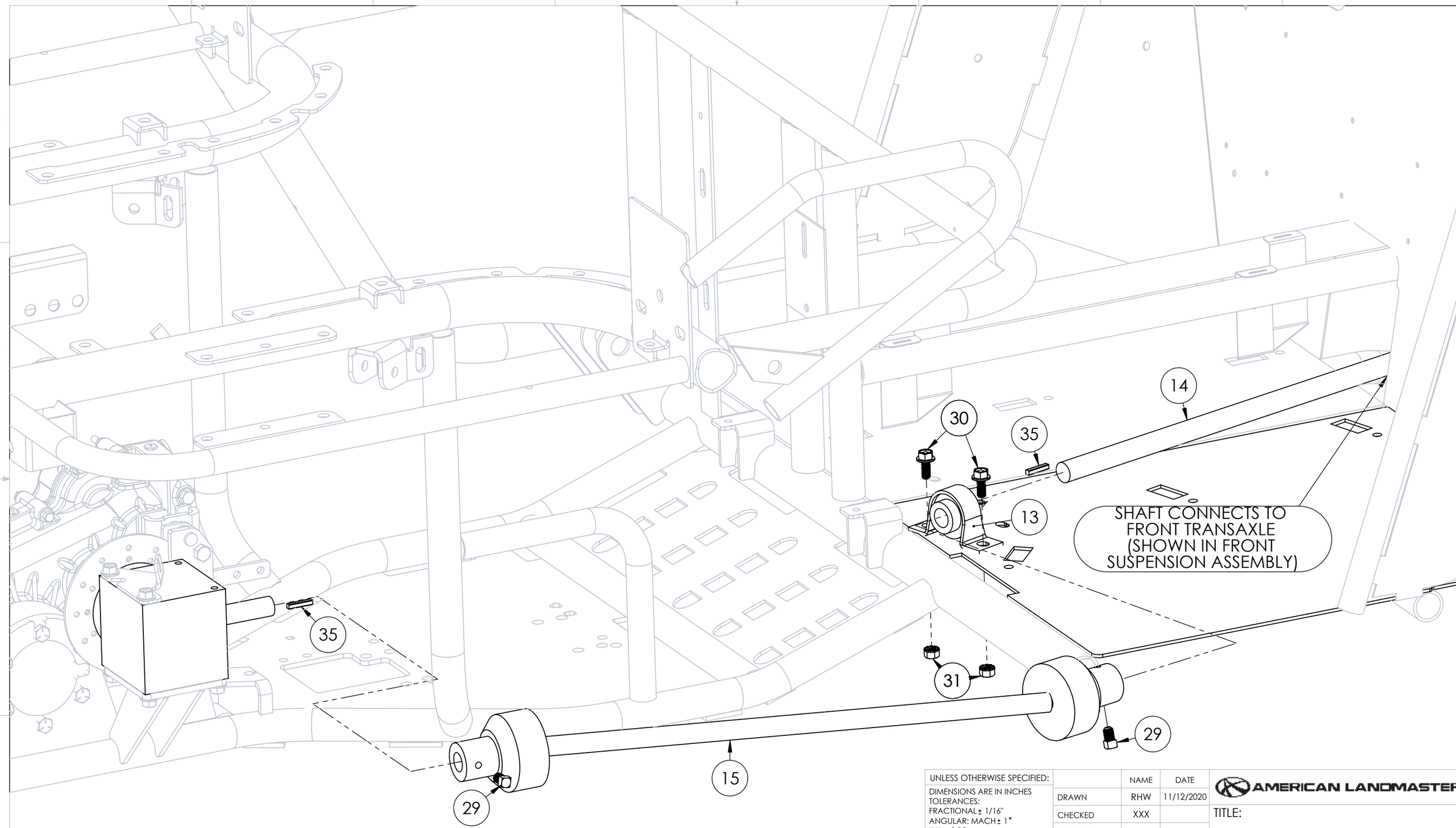

UNLESS OTHERWISE SPECIFIED:		NAME	DATE
DIMENSIONS ARE IN INCHES TOLERANCES: FRACTIONAL ± 1/16" ANGULAR: MACH ± 1° X.X ± 0.05 X.XX ± 0.01 X.XXX ±0.005 BEND ± 2°	DRAWN	RHW	11/12/2020
	CHECKED	XXX	
	ENG APPR.		
	MFG APPR.		
INTERPRET GEOMETRIC TOLERANCING PER:	Q.A.		
MATERIAL	COMMENTS:		
FINISH			
DO NOT SCALE DRAWING			

AMERICAN LANDMASTER

TITLE:

18984 4X4 DRIVE SHAFT ASSEMBLY

SIZE	DWG. NO.	REV
B	18984 TRANSAXLE ASSEMBLY3	0
SCALE: 1:50	WEIGHT:	SHEET 1 OF 1

PROPRIETARY AND CONFIDENTIAL

THE INFORMATION CONTAINED IN THIS DRAWING IS THE SOLE PROPERTY OF ASW, LLC. ANY REPRODUCTION IN PART OR AS A WHOLE WITHOUT THE WRITTEN PERMISSION OF ASW, LLC IS PROHIBITED.

**** PRINTED VERSIONS OF THIS DOCUMENT FOR REFERENCE ONLY ****

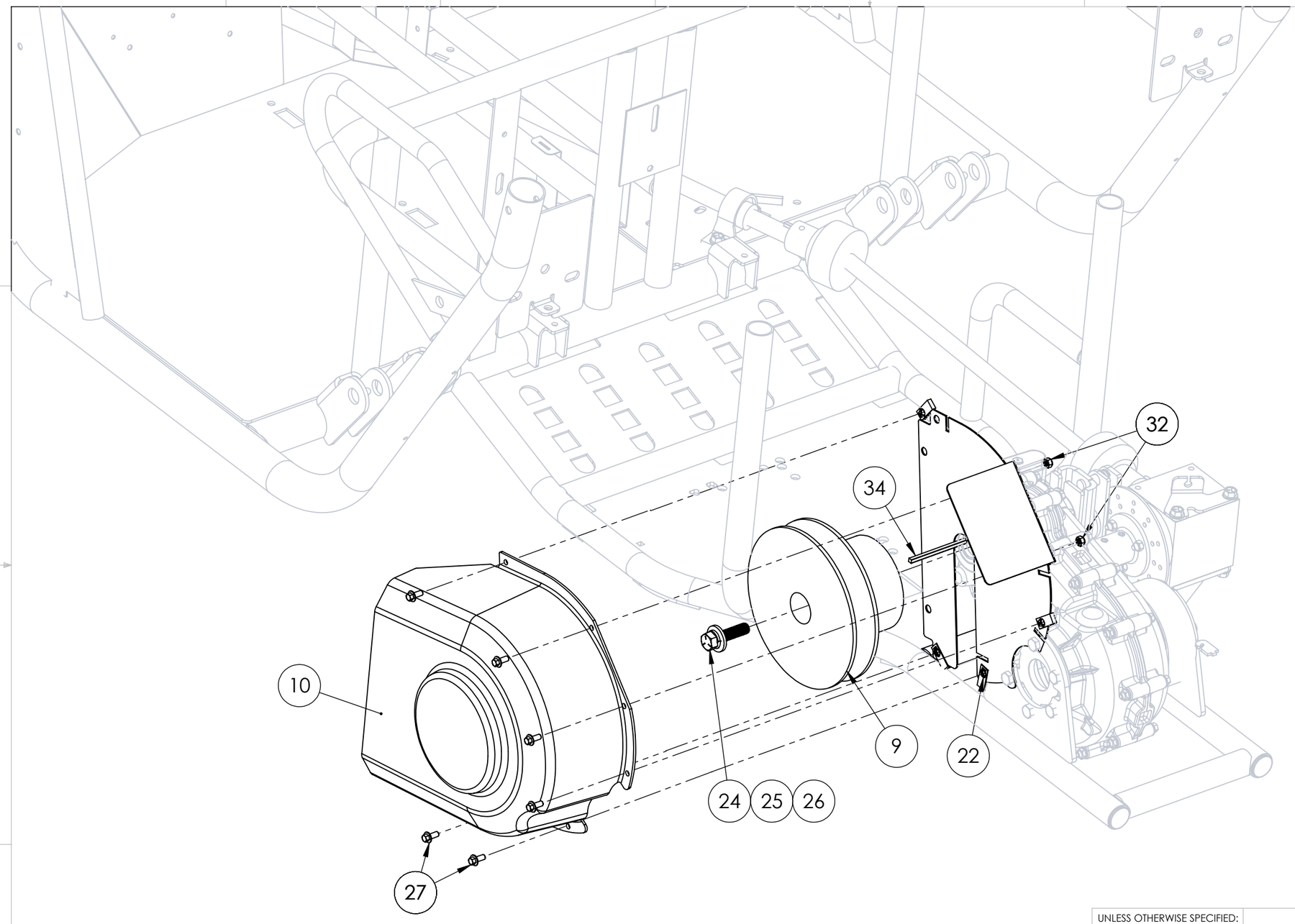

PROPRIETARY AND CONFIDENTIAL

THE INFORMATION CONTAINED IN THIS DRAWING IS THE SOLE PROPERTY OF ASW, LLC. ANY REPRODUCTION IN PART OR AS A WHOLE WITHOUT THE WRITTEN PERMISSION OF ASW, LLC IS PROHIBITED.

UNLESS OTHERWISE SPECIFIED:
DIMENSIONS ARE IN INCHES
TOLERANCES:
FRACTIONAL ± 1/16"
ANGULAR: MACH ± 1°
X.X ± 0.05
X.XX ± 0.01
X.XXX ± 0.005 BEND ± 2°

INTERPRET GEOMETRIC TOLERANCING PER:

MATERIAL

FINISH

DO NOT SCALE DRAWING

	NAME	DATE
DRAWN	RHW	11/12/2020
CHECKED	XXX	
ENG APPR.		
MFG APPR.		
Q.A.		

COMMENTS:

AMERICAN LANDMASTER

TITLE:

18984 DRIVER SIDE TRANSAXLE ASSEMBLY

SIZE	DWG. NO.	REV
B	18984 TRANSAXLE ASSEMBLY4	0

SCALE: 1:50 WEIGHT: SHEET 1 OF 1

**** PRINTED VERSIONS OF THIS DOCUMENT FOR REFERENCE ONLY ****

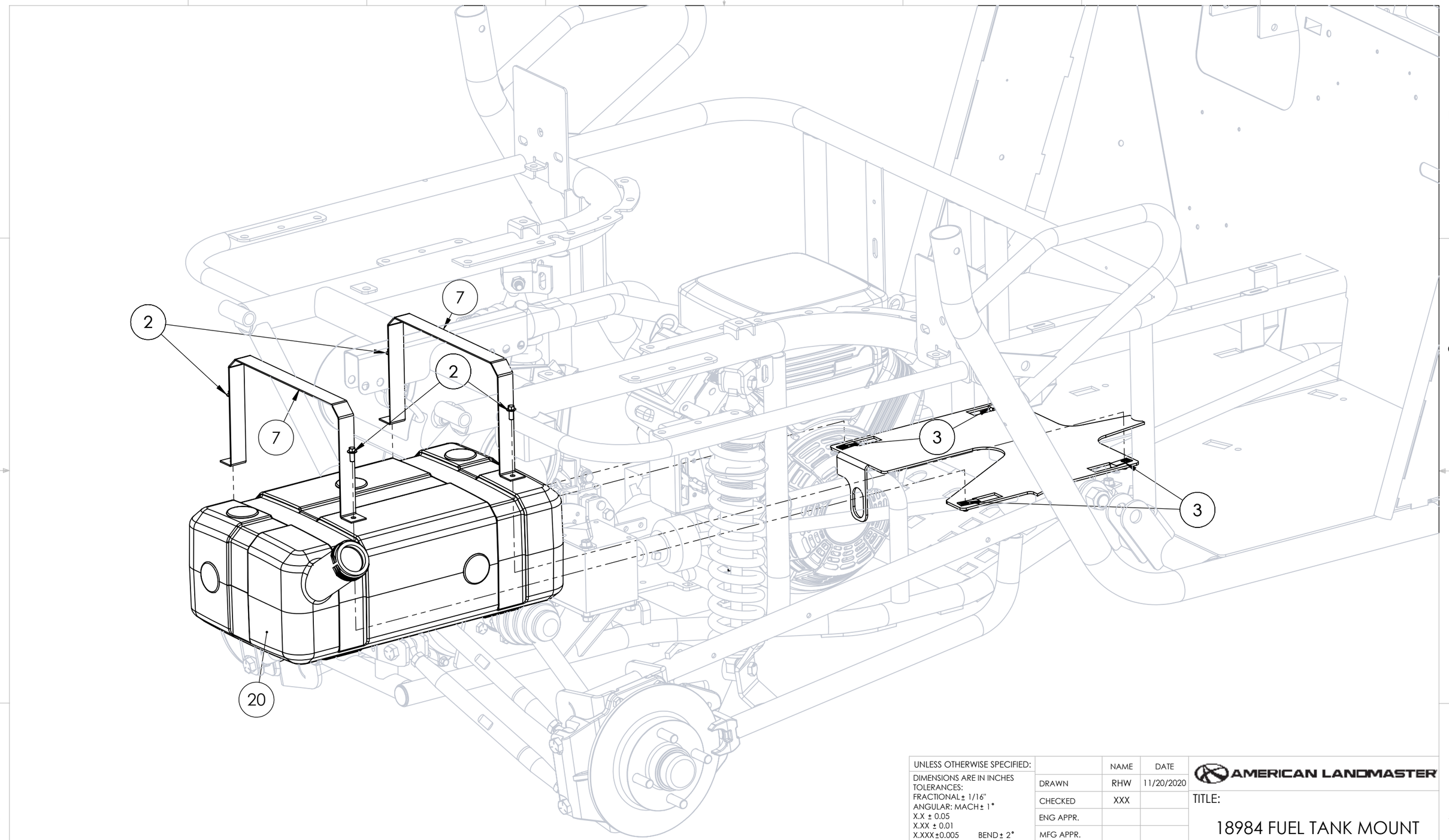

PROPRIETARY AND CONFIDENTIAL

THE INFORMATION CONTAINED IN THIS DRAWING IS THE SOLE PROPERTY OF ASW, LLC. ANY REPRODUCTION IN PART OR AS A WHOLE WITHOUT THE WRITTEN PERMISSION OF ASW, LLC IS PROHIBITED.

UNLESS OTHERWISE SPECIFIED:
DIMENSIONS ARE IN INCHES
TOLERANCES:
FRACTIONAL ± 1/16"
ANGULAR: MACH ± 1°
X.X ± 0.05
X.XX ± 0.01
X.XXX ± 0.005 BEND ± 2°

INTERPRET GEOMETRIC TOLERANCING PER:

MATERIAL

FINISH

DO NOT SCALE DRAWING

	NAME	DATE
DRAWN	RHW	11/20/2020
CHECKED	XXX	
ENG APPR.		
MFG APPR.		
Q.A.		

COMMENTS:

AMERICAN LANDMASTER

TITLE:

18984 FUEL TANK MOUNT

SIZE	DWG. NO.	REV
B	18984 FUEL TANK ASSEMBLY	0

SCALE: 1:50 WEIGHT: SHEET 1 OF 1

**** PRINTED VERSIONS OF THIS DOCUMENT FOR REFERENCE ONLY ****

REVISIONS				
REV	ECN	DESCRIPTION	DATE	APPROVED

ITEM NO.	PART NUMBER	DESCRIPTION	QTY.
1	17510	HUB, REAR TRAILING ARM	1
2	2-25011	ROTOR, 8-3/4 IN - 4ON4 1/2-20 STUD	1
3	19284	BEARING, RADIAL 6207RS	2
4	2-11124	BRAKE CALIPER-RAZORBACK (99-22664)	1
5	2-11168	BRAKE MOUNT PINS-RAZORBACK (05-17221)	2
6	2-11169	BRAKE, RETAINING CLIPS-SMALL-RAZORBACK	2
7	2-11167	BRAKE PADS-RAZORBACK, TYPE 98 (33-23194)	2

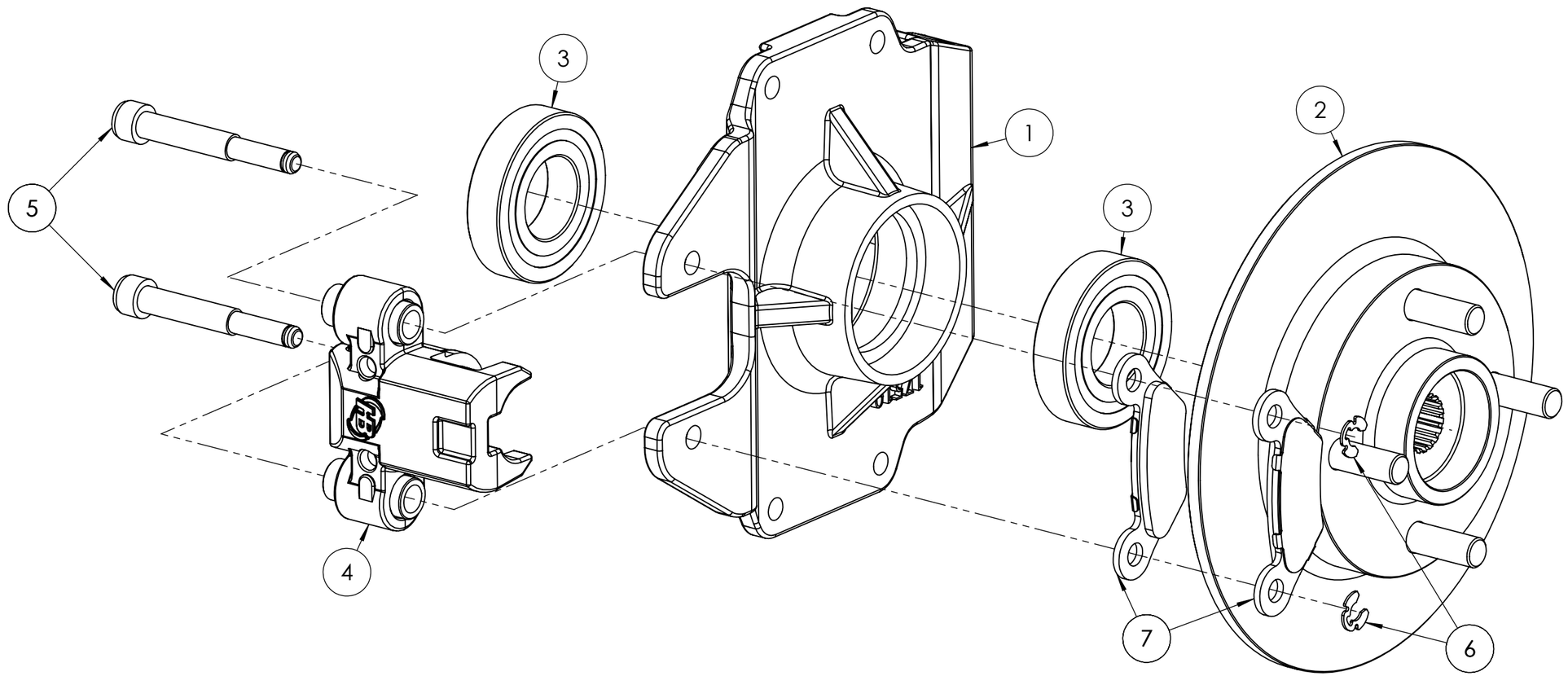

PROPRIETARY AND CONFIDENTIAL

THE INFORMATION CONTAINED IN THIS DRAWING IS THE SOLE PROPERTY OF ASW, LLC. ANY REPRODUCTION IN PART OR AS A WHOLE WITHOUT THE WRITTEN PERMISSION OF ASW, LLC IS PROHIBITED.

UNLESS OTHERWISE SPECIFIED:
DIMENSIONS ARE IN INCHES
TOLERANCES:
FRACTIONAL ± 1/16"
ANGULAR: MACH ± 1°
X.X ± 0.05
X.XX ± 0.01
X.XXX ± 0.005 BEND ± 2°

INTERPRET GEOMETRIC TOLERANCING PER:

MATERIAL

FINISH

DO NOT SCALE DRAWING

	NAME	DATE
DRAWN	RHW	1/6/2021
CHECKED	XXX	
ENG APPR.		
MFG APPR.		
Q.A.		

COMMENTS:

AMERICAN LANDMASTER

TITLE:

REAR HUB ASSEMBLY

SIZE	DWG. NO.	REV
B	18984 REAR HUB ASSEMBLY	0

SCALE: 1:10 WEIGHT: SHEET 1 OF 1

**** PRINTED VERSIONS OF THIS DOCUMENT FOR REFERENCE ONLY ****

ITEM NO.	PART NUMBER	DESCRIPTION	STATION 2/QTY.
1	18190-2	WDMT, FRAME IRS STD CHASSIS	1
2	14426	BOLT, M6 X 1.0 X 14	4
3	15823	NUT, CLIP ON TAPPED - M6 X 1.0; 11 GA MA	4
4	16625	NUT, M16 X 1.5 CASTLE	2
5	17479	SHOCK, DUAL RATE 400/900	2
6	17485-9	WDMT, TRAILING ARM RH-48	1
7	17801	STRAP, FUEL TANK	2
8	17978	ROD END, 1/2-20 LH	4
9	17979	ROD END, 1/2-20 RH	4
10	17980	ARM, RADIUS 48" OAW	4
11	17982	NUT, 1/2-20 THIN RH	4
12	17983	NUT, 1/2-20 THIN LH	4
13	18046	SPACER, .7 X .5 X .285	8
14	18055-9	WDMT, TRAILING ARM LH-48	1
15	18565	ROD END, 3/4	2
16	18594	ASM, REAR CORNER MODULE	2
17	18693	NUT, 1/2-20 NYLOCK	8
18	18702	BOLT, M10X1.5 X 60MM HIGH STRENGTH	4
19	18705	NUT, 3/4-16 JAM	2
20	18772	TANK, FUEL FLAM FRNT GAUGE BLK	1
21	2-11124	BRAKE CALIPER-RAZORBACK (99-22664)	2
22	2-30623	HUB, UTV-DUST CAP	2

ITEM NO.	PART NUMBER	DESCRIPTION	STATION 2/QTY.
23	2-50010	NUT, 3/8-16 NYLOCK	8
24	2-50020	NUT, 3/4-16 NYLOCK	2
25	2-50065	NUT, M10 X 1.5 NYLON LOCKING	4
26	2-50215	BOLT, 3/8IN X 1-1/4IN HEX HEAD G5	8
27	2-50249	BOLT, 1/2IN-20 X 2.5 IN FT HH	8
28	2-50280	BOLT, 3/4IN X 2-1/2IN-HH G5-FT	2
29	17511	SHAFT, CV LR 48	1
30	17512	SHAFT, CV RR 48	1
31	2-30621	HUB-UTV-COTTER PIN	2

**** PRINTED VERSIONS OF THIS DOCUMENT FOR REFERENCE ONLY ****

PROPRIETARY AND CONFIDENTIAL

THE INFORMATION CONTAINED IN THIS DRAWING IS THE SOLE PROPERTY OF ASW, LLC. ANY REPRODUCTION IN PART OR AS A WHOLE WITHOUT THE WRITTEN PERMISSION OF ASW, LLC IS PROHIBITED.

UNLESS OTHERWISE SPECIFIED:
DIMENSIONS ARE IN INCHES
TOLERANCES:
FRACTIONAL ± 1/16"
ANGULAR: MACH ± 1°
X.X ± 0.05
X.XX ± 0.01
X.XXX ± 0.005 BEND ± 2°

INTERPRET GEOMETRIC TOLERANCING PER:

MATERIAL

FINISH

DO NOT SCALE DRAWING

	NAME	DATE
DRAWN	RHW	11/16/2020
CHECKED	XXX	
ENG APPR.		
MFG APPR.		
Q.A.		

COMMENTS:

AMERICAN LANDMASTER

TITLE:

18984 REAR SUSPENSION ASSEMBLY1

SIZE	DWG. NO.	REV
B	18984 REAR SUSPENSION ASSEMBLY1	0

SCALE: 1:50 WEIGHT: SHEET 1 OF 2

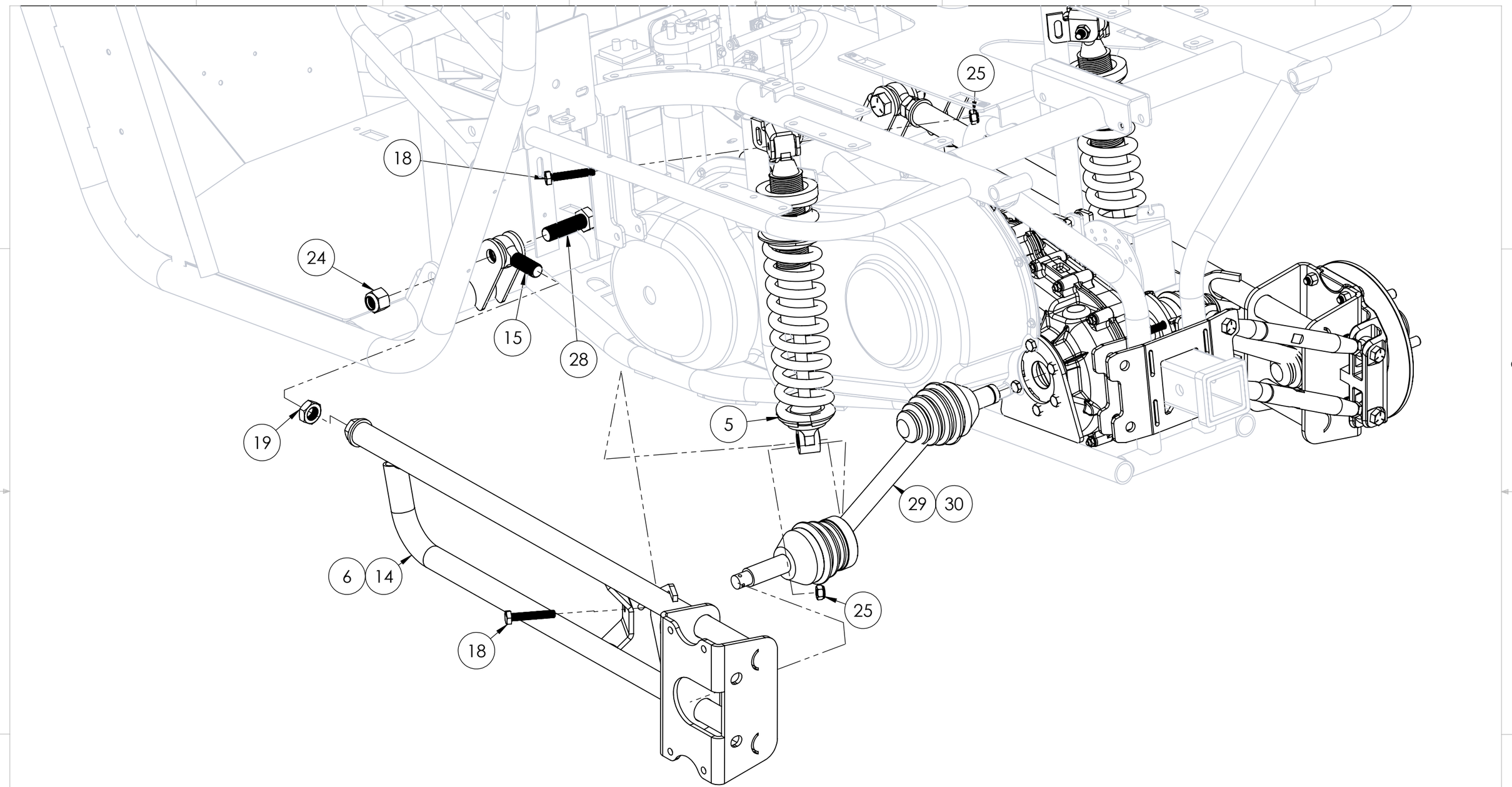

PROPRIETARY AND CONFIDENTIAL

THE INFORMATION CONTAINED IN THIS DRAWING IS THE SOLE PROPERTY OF ASW, LLC. ANY REPRODUCTION IN PART OR AS A WHOLE WITHOUT THE WRITTEN PERMISSION OF ASW, LLC IS PROHIBITED.

UNLESS OTHERWISE SPECIFIED:
DIMENSIONS ARE IN INCHES
TOLERANCES:
FRACTIONAL ± 1/16"
ANGULAR: MACH ± 1°
X.X ± 0.05
X.XX ± 0.01
X.XXX ± 0.005 BEND ± 2°

INTERPRET GEOMETRIC TOLERANCING PER:

MATERIAL

FINISH

DO NOT SCALE DRAWING

	NAME	DATE
DRAWN	RHW	11/16/2020
CHECKED	XXX	
ENG APPR.		
MFG APPR.		
Q.A.		

COMMENTS:

AMERICAN LANDMASTER

TITLE:

18984 REAR SUSPENSION ASSEMBLY1

SIZE	DWG. NO.	REV
B	18984 REAR SUSPENSION ASSEMBLY1	0

SCALE: 1:50 WEIGHT: SHEET 2 OF 2

**** PRINTED VERSIONS OF THIS DOCUMENT FOR REFERENCE ONLY ****

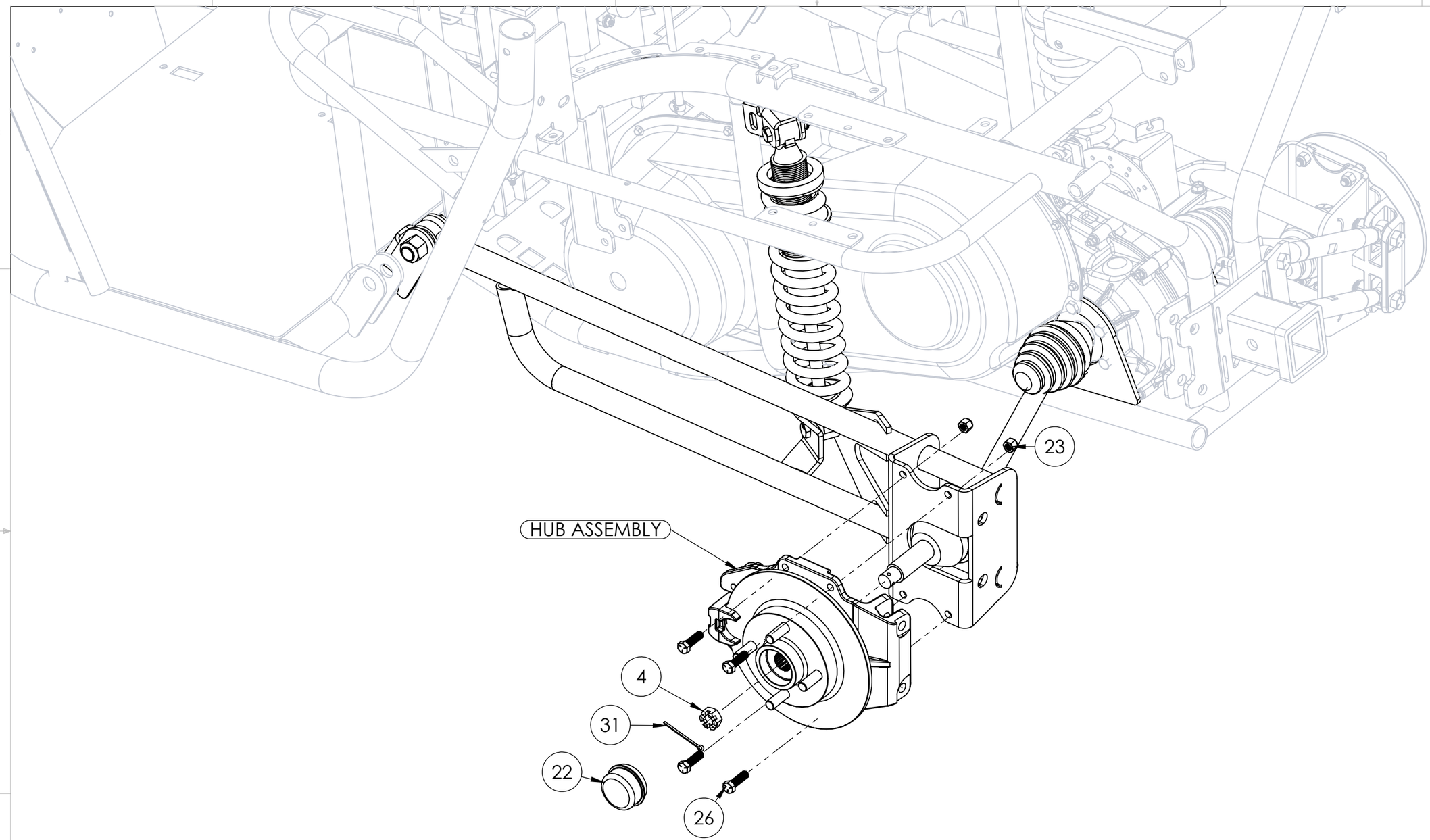

UNLESS OTHERWISE SPECIFIED:		NAME	DATE
DIMENSIONS ARE IN INCHES TOLERANCES: FRACTIONAL ± 1/16" ANGULAR: MACH ± 1° X.X ± 0.05 X.XX ± 0.01 X.XXX ±0.005 BEND ± 2°	DRAWN	RHW	11/20/2020
	CHECKED	XXX	
	ENG APPR.		
	MFG APPR.		
INTERPRET GEOMETRIC TOLERANCING PER:	Q.A.		
MATERIAL	COMMENTS:		
FINISH			
DO NOT SCALE DRAWING			

AMERICAN LANDMASTER

TITLE:

18984 REAR SUSPENSION ASSEMBLY2

SIZE	DWG. NO.	REV
B	18984 REAR SUSPENSION ASSEMBLY2	0
SCALE: 1:50	WEIGHT:	SHEET 1 OF 1

PROPRIETARY AND CONFIDENTIAL

THE INFORMATION CONTAINED IN THIS DRAWING IS THE SOLE PROPERTY OF ASW, LLC. ANY REPRODUCTION IN PART OR AS A WHOLE WITHOUT THE WRITTEN PERMISSION OF ASW, LLC IS PROHIBITED.

**** PRINTED VERSIONS OF THIS DOCUMENT FOR REFERENCE ONLY ****

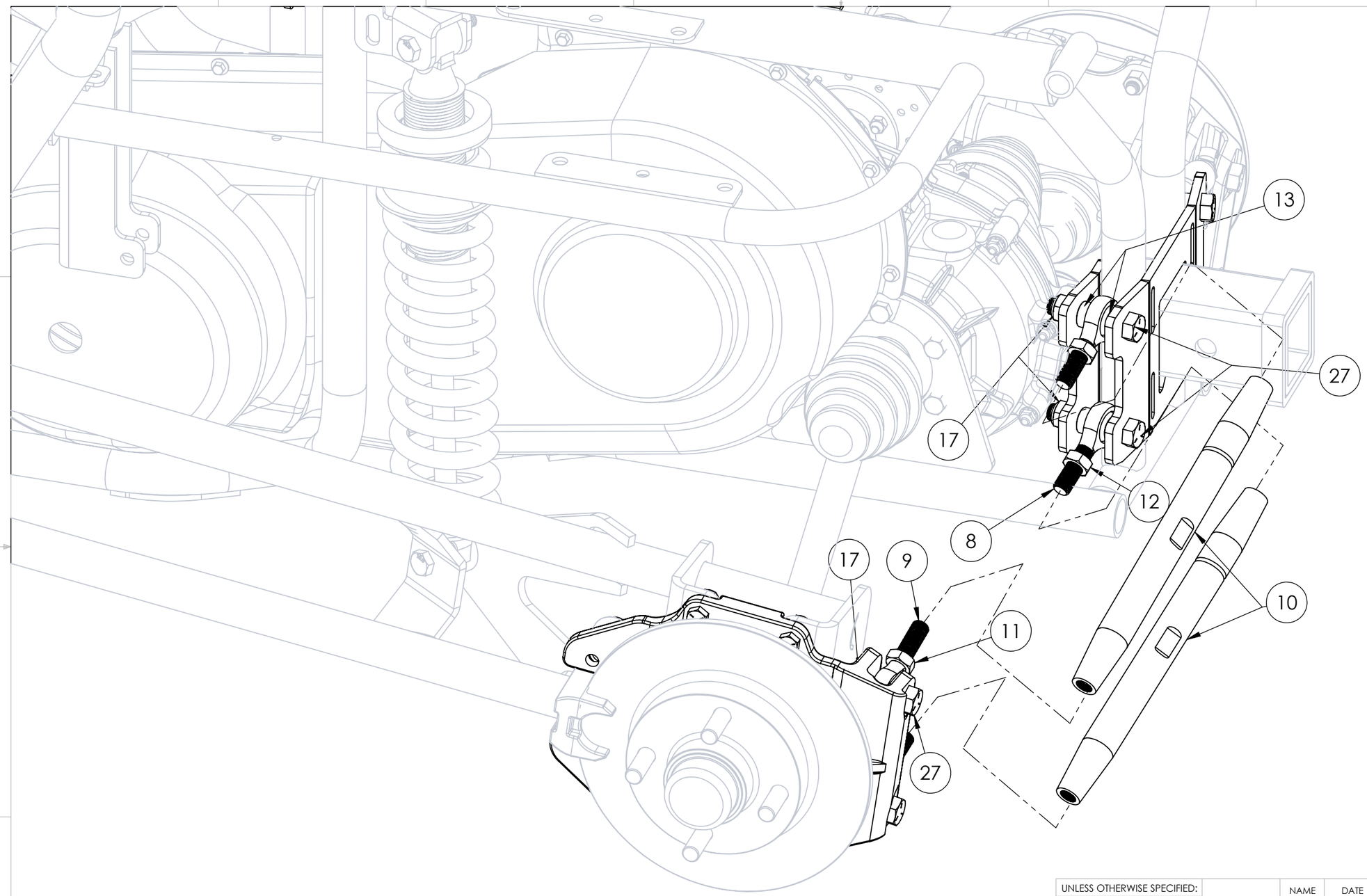

PROPRIETARY AND CONFIDENTIAL

THE INFORMATION CONTAINED IN THIS DRAWING IS THE SOLE PROPERTY OF ASW, LLC. ANY REPRODUCTION IN PART OR AS A WHOLE WITHOUT THE WRITTEN PERMISSION OF ASW, LLC IS PROHIBITED.

UNLESS OTHERWISE SPECIFIED:		NAME	DATE
DIMENSIONS ARE IN INCHES TOLERANCES: FRACTIONAL ± 1/16" ANGULAR: MACH ± 1° X.X ± 0.05 X.XX ± 0.01 X.XXX ± 0.005 BEND ± 2°	DRAWN	RHW	11/20/2020
	CHECKED	XXX	
	ENG APPR.		
	MFG APPR.		
INTERPRET GEOMETRIC TOLERANCING PER:	Q.A.		
MATERIAL	COMMENTS:		
FINISH			
DO NOT SCALE DRAWING			

AMERICAN LANDMASTER

TITLE:

18984 REAR SUSPENSION ASSEMBLY3

SIZE	DWG. NO.	REV
B	18984 REAR SUSPENSION ASSEMBLY3	0

SCALE: 1:50 WEIGHT: SHEET 1 OF 1

**** PRINTED VERSIONS OF THIS DOCUMENT FOR REFERENCE ONLY ****

REVISIONS				
REV	ECN	DESCRIPTION	DATE	APPROVED

ITEM NO.	PART NUMBER	DESCRIPTION	QTY.
1	18037	HUB, FRONT RH	1
2	18038	HUB, FRONT LH	1
3	2-25011	ROTOR, 8-3/4 IN - 4ON4 1/2-20 STUD	1
4	19284	BEARING, RADIAL 6207RS	2
5	2-11124	BRAKE CALIPER-RAZORBACK (99-22664)	1
6	2-11167	BRAKE PADS-RAZORBACK, TYPE 98 (33-23194)	2
7	2-11168	BRAKE MOUNT PINS-RAZORBACK (05-17221)	2
8	2-11169	BRAKE, RETAINING CLIPS-SMALL-RAZORBACK	2

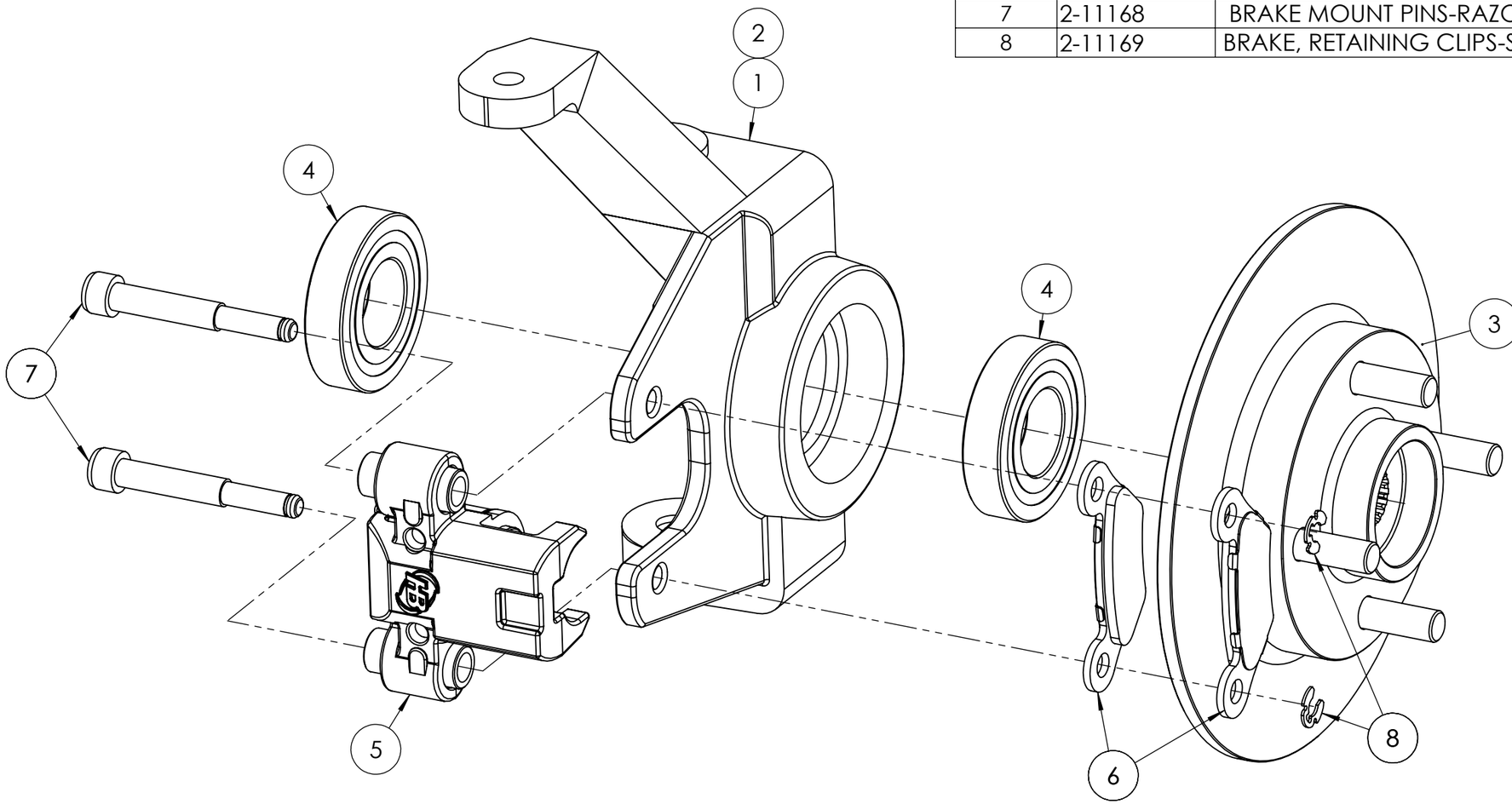

**** PRINTED VERSIONS OF THIS DOCUMENT FOR REFERENCE ONLY ****

PROPRIETARY AND CONFIDENTIAL

THE INFORMATION CONTAINED IN THIS DRAWING IS THE SOLE PROPERTY OF ASW, LLC. ANY REPRODUCTION IN PART OR AS A WHOLE WITHOUT THE WRITTEN PERMISSION OF ASW, LLC IS PROHIBITED.

UNLESS OTHERWISE SPECIFIED:
DIMENSIONS ARE IN INCHES
TOLERANCES:
FRACTIONAL ± 1/16"
ANGULAR: MACH ± 1°
X.X ± 0.05
X.XX ± 0.01
X.XXX ± 0.005 BEND ± 2°

INTERPRET GEOMETRIC TOLERANCING PER:

MATERIAL

FINISH

DO NOT SCALE DRAWING

	NAME	DATE
DRAWN	RHW	12/29/2020
CHECKED	XXX	
ENG APPR.		
MFG APPR.		
Q.A.		

COMMENTS:

AMERICAN LANDMASTER

TITLE:

ASM, FRONT RIGHT CORNER MODULE

SIZE	DWG. NO.	REV
B	18984 FRONT HUB ASSEMBLY	0

SCALE: 1:10 WEIGHT: SHEET 1 OF 1

ITEM NO.	PART NUMBER	DESCRIPTION	STATION 3/QTY.
1	18190-2	WDMT, FRAME IRS STD CHASSIS	1
2	2-20839	FRONT DIFFERENTIAL-CFD #6203-01-282	1
3	2-11124	BRAKE CALIPER-RAZORBACK (99-22664)	2
4	2-30623	HUB, UTV-DUST CAP	2
5	17480	SHOCK, 325	2
6	18595	ASM, FRONT LEFT CORNER MODULE	1
7	16898-2	ASM, PEDAL CLUSTER - 2018	1
8	18555-2	WDMT, STEERING SUPPORT	1
9	18199-9	WDMT, A-ARM 48 LOWER-RAW	2
10	18200-9	WDMT, A-ARM 48 UPPER-RAW	2
11	18596	ASM, FRONT RIGHT CORNER MODULE	1
12	2-42114	DOM, A-ARM SPACER	4
13	18191	BUSHING, 1" OD / .625" ID	10
14	19059	KIT, POWER STEERING, W/ CONNECTORS	1
15	17184	RUBBER, 2018 PEDAL STOP	2
16	16678	FRONT A-ARM TIE BAR 4-LINK - BLACK	1
17	16905	MASTER CYLINDER, 4WD	1
18	18051	RACK & PINION, IRS 48	1
19	18053	SHAFT, CV FRONT 48	2
20	18043	BALL JOINT, K7366	4
21	2-50007	NUT, 5/16-18 NYLOCK	2
22	2-50005	NUT, 5/16-18 KEPS	10
24	16625	NUT, M16 X 1.5 CASTLE	2
25	18701	BOLT, 3/8-24 X 8IN HHCS GR8	4
26	18704	NUT, 3/8-24 NYLOCK	4
27	2-50150	BOLT, 5/16-18 X 1 HEX HEAD G5	6
28	2-50171	BOLT, 5/16IN-18 X 3-3/4IN HH G5	4
29	2-50701	WASHER, 5/16 SAE FLAT	4
30	16888	BOLT, 3/8" x 5.5"	1

ITEM NO.	PART NUMBER	DESCRIPTION	STATION 3/QTY.
31	2-50156	BOLT, 5/16IN X 2-1/4IN HEX HEAD G5	2
32	15384	WASHER, BELLEVILLE M16	2
33	18702	BOLT, M10X1.5 X 60MM HIGH STRENGTH	4
34	2-50065	NUT, 10 MM x 1.5 NYLOCK	4
35	2-30621	HUB-UTV-COTTER PIN	2
36	2-10526	SHAFT, STEERING - UNIVERSAL	1
37	17638	SHAFT, POWER STEERING (WITH POWERSTEERING)	1
38	17639	JOINT, POWER STEERING COUPLER (WITH POWERSTEERING)	1

**** PRINTED VERSIONS OF THIS DOCUMENT FOR REFERENCE ONLY ****

PROPRIETARY AND CONFIDENTIAL

THE INFORMATION CONTAINED IN THIS DRAWING IS THE SOLE PROPERTY OF ASW, LLC. ANY REPRODUCTION IN PART OR AS A WHOLE WITHOUT THE WRITTEN PERMISSION OF ASW, LLC IS PROHIBITED.

UNLESS OTHERWISE SPECIFIED:
DIMENSIONS ARE IN INCHES
TOLERANCES:
FRACTIONAL ± 1/16"
ANGULAR: MACH ± 1°
X.X ± 0.05
X.XX ± 0.01
X.XXX ± 0.005 BEND ± 2°

INTERPRET GEOMETRIC TOLERANCING PER:

MATERIAL

FINISH

DO NOT SCALE DRAWING

	NAME	DATE
DRAWN	RHW	11/23/2020
CHECKED	XXX	
ENG APPR.		
MFG APPR.		
Q.A.		

COMMENTS:

AMERICAN LANDMASTER

TITLE:

FRONT SUSPENSION ASSEMBLY1

SIZE	DWG. NO.	REV
B	18984 FRONT SUSPENSION ASSEMBLY1	0

SCALE: 1:100 WEIGHT: SHEET 1 OF 2

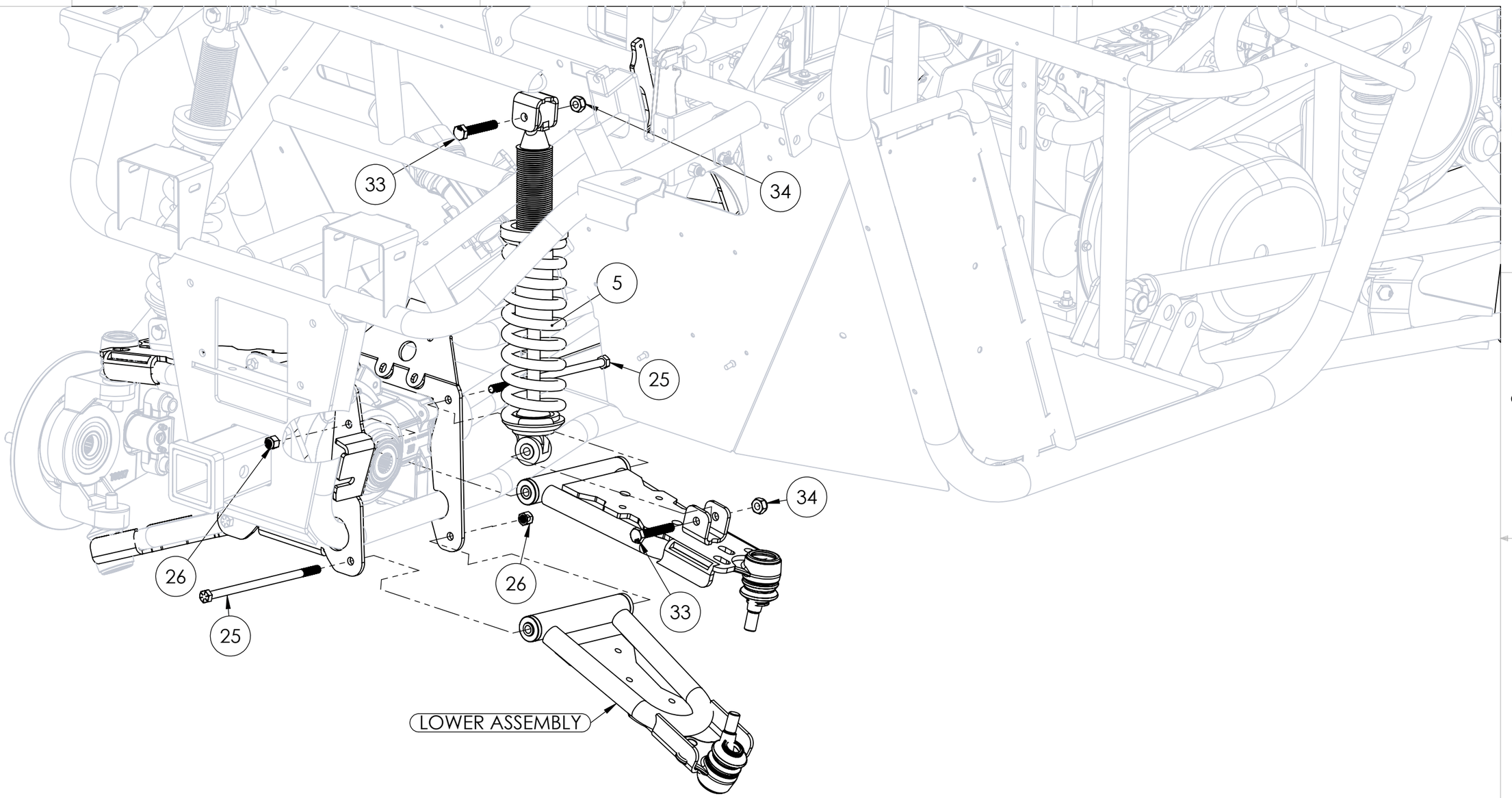

PROPRIETARY AND CONFIDENTIAL

THE INFORMATION CONTAINED IN THIS DRAWING IS THE SOLE PROPERTY OF ASW, LLC. ANY REPRODUCTION IN PART OR AS A WHOLE WITHOUT THE WRITTEN PERMISSION OF ASW, LLC IS PROHIBITED.

UNLESS OTHERWISE SPECIFIED:		NAME	DATE
DIMENSIONS ARE IN INCHES TOLERANCES: FRACTIONAL ± 1/16" ANGULAR: MACH ± 1° X.X ± 0.05 X.XX ± 0.01 X.XXX ± 0.005 BEND ± 2°	DRAWN	RHW	11/23/2020
	CHECKED	XXX	
	ENG APPR.		
	MFG APPR.		
INTERPRET GEOMETRIC TOLERANCING PER:	Q.A.		
MATERIAL	COMMENTS:		
FINISH			
DO NOT SCALE DRAWING			

AMERICAN LANDMASTER

TITLE:

FRONT SUSPENSION ASSEMBLY1

SIZE	DWG. NO.	REV
B	18984 FRONT SUSPENSION ASSEMBLY1	0
SCALE: 1:5	WEIGHT:	SHEET 2 OF 2

**** PRINTED VERSIONS OF THIS DOCUMENT FOR REFERENCE ONLY ****

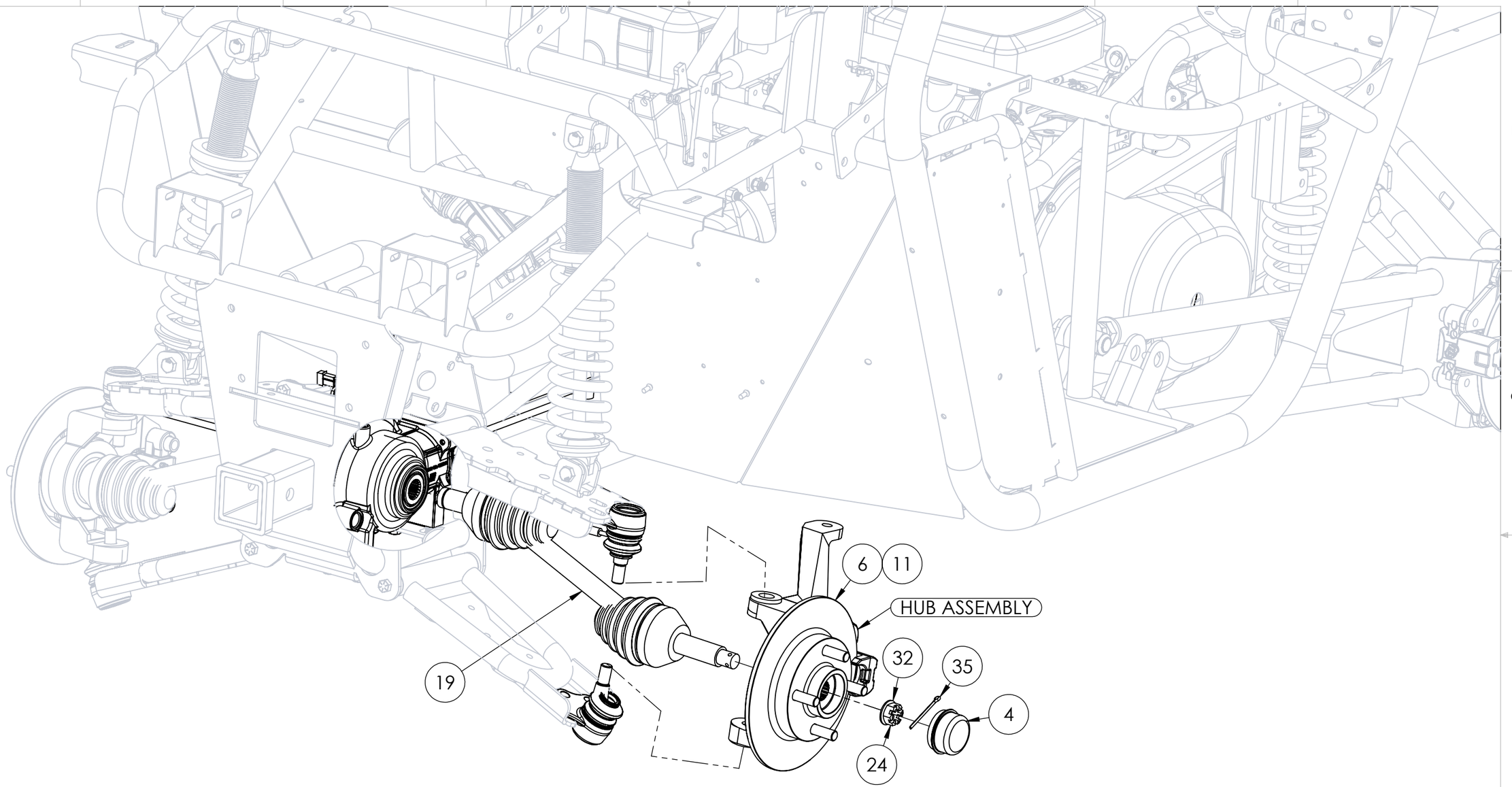

**** PRINTED VERSIONS OF THIS DOCUMENT FOR REFERENCE ONLY ****

PROPRIETARY AND CONFIDENTIAL

THE INFORMATION CONTAINED IN THIS DRAWING IS THE SOLE PROPERTY OF ASW, LLC. ANY REPRODUCTION IN PART OR AS A WHOLE WITHOUT THE WRITTEN PERMISSION OF ASW, LLC IS PROHIBITED.

UNLESS OTHERWISE SPECIFIED:
DIMENSIONS ARE IN INCHES
TOLERANCES:
FRACTIONAL ± 1/16"
ANGULAR: MACH ± 1°
X.X ± 0.05
X.XX ± 0.01
X.XXX ± 0.005 BEND ± 2°

INTERPRET GEOMETRIC TOLERANCING PER:

MATERIAL

FINISH

DO NOT SCALE DRAWING

	NAME	DATE
DRAWN	RHW	11/24/2020
CHECKED	XXX	
ENG APPR.		
MFG APPR.		
Q.A.		

COMMENTS:

AMERICAN LANDMASTER

TITLE:

FRONT SUSPENSION ASSEMBLY2

SIZE	DWG. NO.	REV
B	18984 FRONT SUSPENSION ASSEMBLY2	0

SCALE: 1:50 WEIGHT: SHEET 1 OF 1

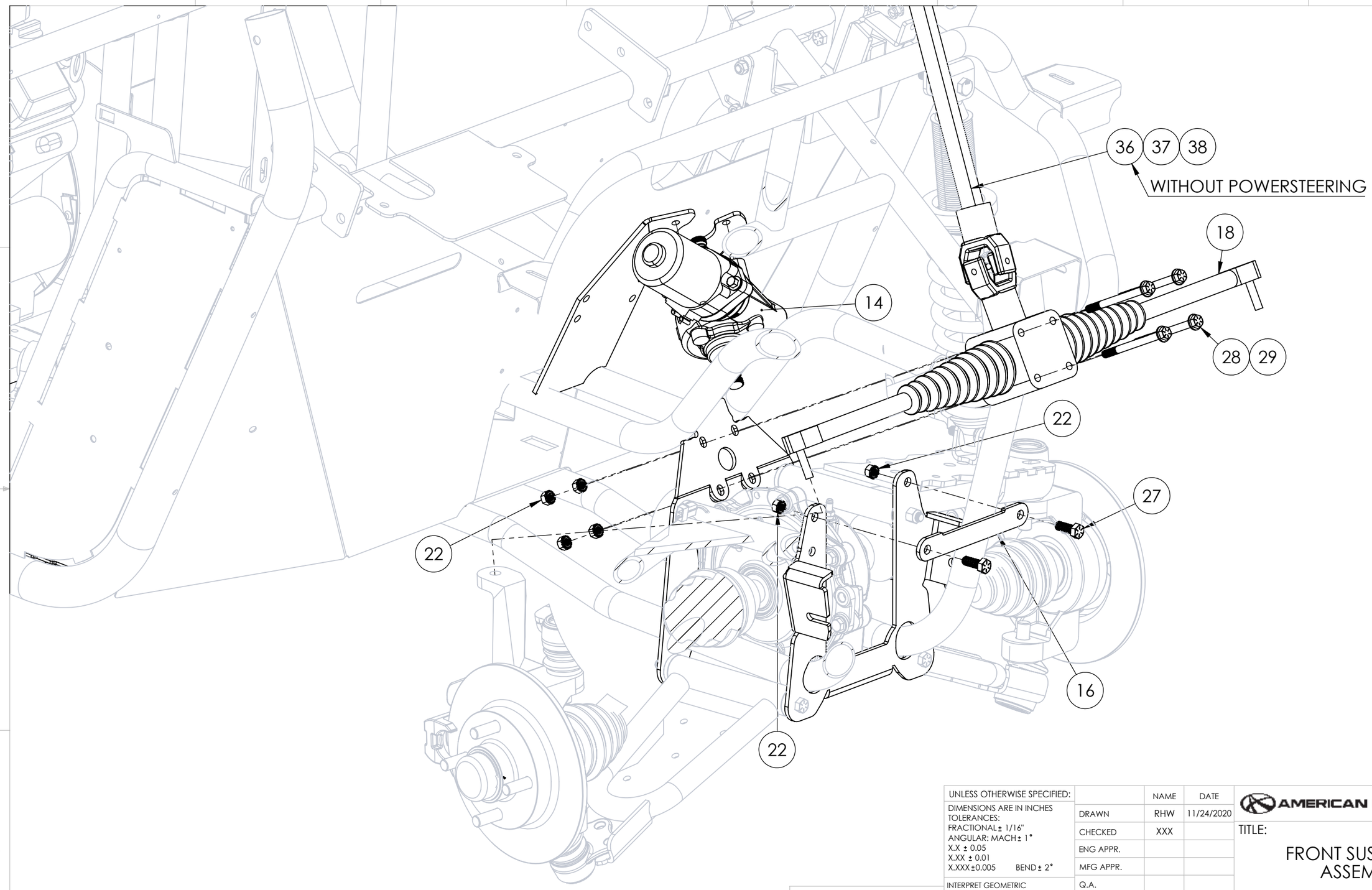

UNLESS OTHERWISE SPECIFIED:		NAME	DATE
DIMENSIONS ARE IN INCHES TOLERANCES: FRACTIONAL ± 1/16" ANGULAR: MACH ± 1° X.X ± 0.05 X.XX ± 0.01 X.XXX ±0.005 BEND ± 2°	DRAWN	RHW	11/24/2020
	CHECKED	XXX	
	ENG APPR.		
	MFG APPR.		
INTERPRET GEOMETRIC TOLERANCING PER:	Q.A.		
MATERIAL	COMMENTS:		
FINISH			
DO NOT SCALE DRAWING			

AMERICAN LANDMASTER

TITLE:

FRONT SUSPENSION ASSEMBLY3

SIZE	DWG. NO.	REV
B	18984 FRONT SUSPENSION ASSEMBLY3	0
SCALE: 1:50	WEIGHT:	SHEET 1 OF 1

PROPRIETARY AND CONFIDENTIAL

THE INFORMATION CONTAINED IN THIS DRAWING IS THE SOLE PROPERTY OF ASW, LLC. ANY REPRODUCTION IN PART OR AS A WHOLE WITHOUT THE WRITTEN PERMISSION OF ASW, LLC IS PROHIBITED.

**** PRINTED VERSIONS OF THIS DOCUMENT FOR REFERENCE ONLY ****

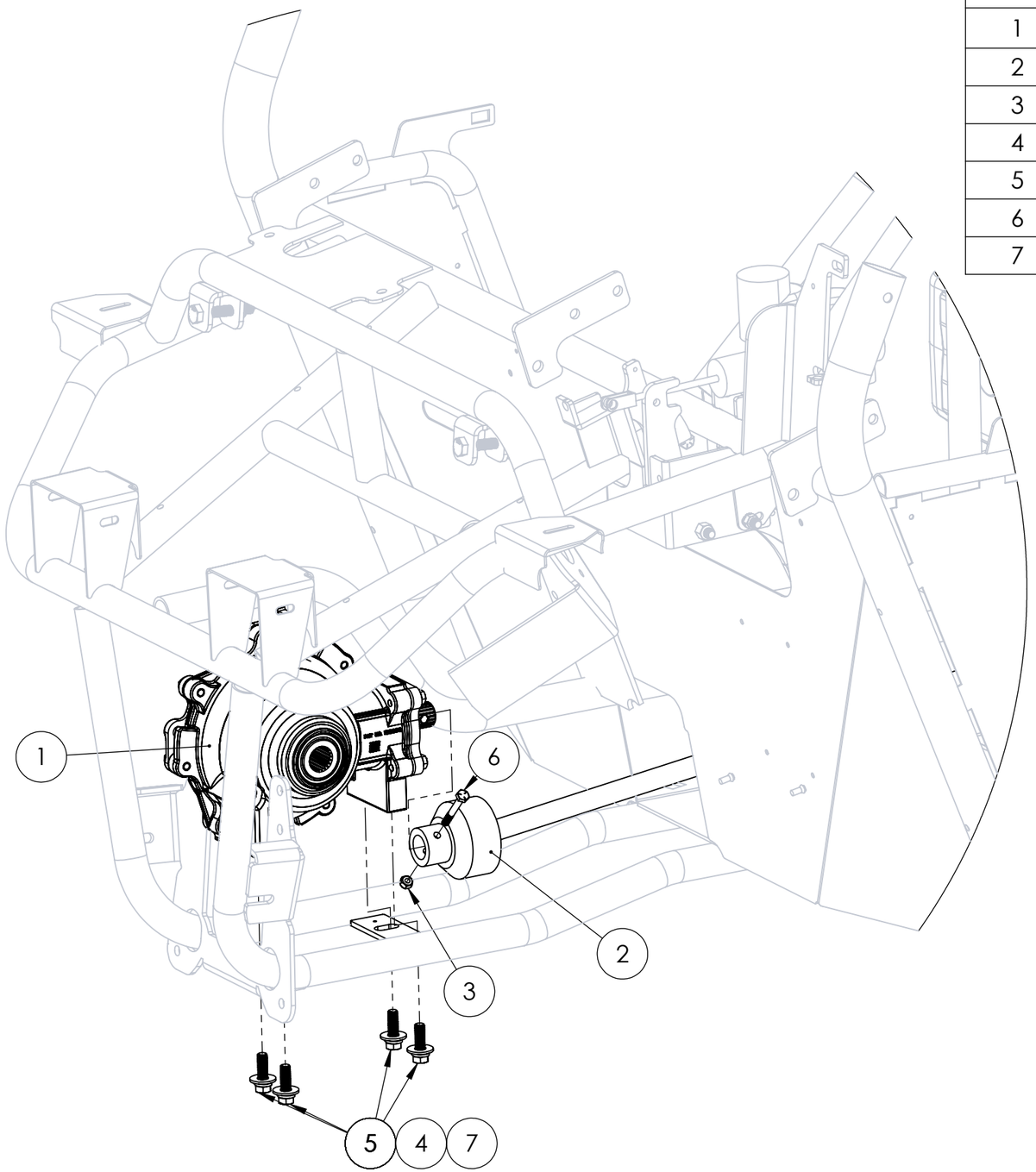

ITEM NO.	PART NUMBER	DESCRIPTION	STATION 3/QTY.
1	2-20839	FRONT DIFFERENTIAL-CFD #6203-01-282	1
2	16430	SHAFT, CV DRIVE - FRONT 36.5" OAL	1
3	2-50001	NUT, 1/4-20 NYLON LOCKING	1
4	2-50741	WASHER, 3/8IN LOCK	4
5	2-50215	BOLT, 3/8IN X 1-1/4IN HEX HEAD G5	4
6	2-50092	BOLT, 1/4IN X 2IN HH G5	1
7	2-50740	WASHER, 3/8IN USS FLAT WASHER	4

**** PRINTED VERSIONS OF THIS DOCUMENT FOR REFERENCE ONLY ****

PROPRIETARY AND CONFIDENTIAL

THE INFORMATION CONTAINED IN THIS DRAWING IS THE SOLE PROPERTY OF ASW, LLC. ANY REPRODUCTION IN PART OR AS A WHOLE WITHOUT THE WRITTEN PERMISSION OF ASW, LLC IS PROHIBITED.

UNLESS OTHERWISE SPECIFIED:
DIMENSIONS ARE IN INCHES
TOLERANCES:
FRACTIONAL ± 1/16"
ANGULAR: MACH ± 1°
X.X ± 0.05
X.XX ± 0.01
X.XXX ± 0.005 BEND ± 2°

INTERPRET GEOMETRIC TOLERANCING PER:

MATERIAL

FINISH

DO NOT SCALE DRAWING

	NAME	DATE
DRAWN	RHW	11/20/2020
CHECKED	XXX	
ENG APPR.		
MFG APPR.		
Q.A.		

COMMENTS:

AMERICAN LANDMASTER

TITLE:

FRONT TRANSAXLE ASSEMBLY

SIZE B | DWG. NO. 18984 FRONT TRANSAXLE ASSEMBLY | REV 0

SCALE: 1:50 | WEIGHT: | SHEET 1 OF 1

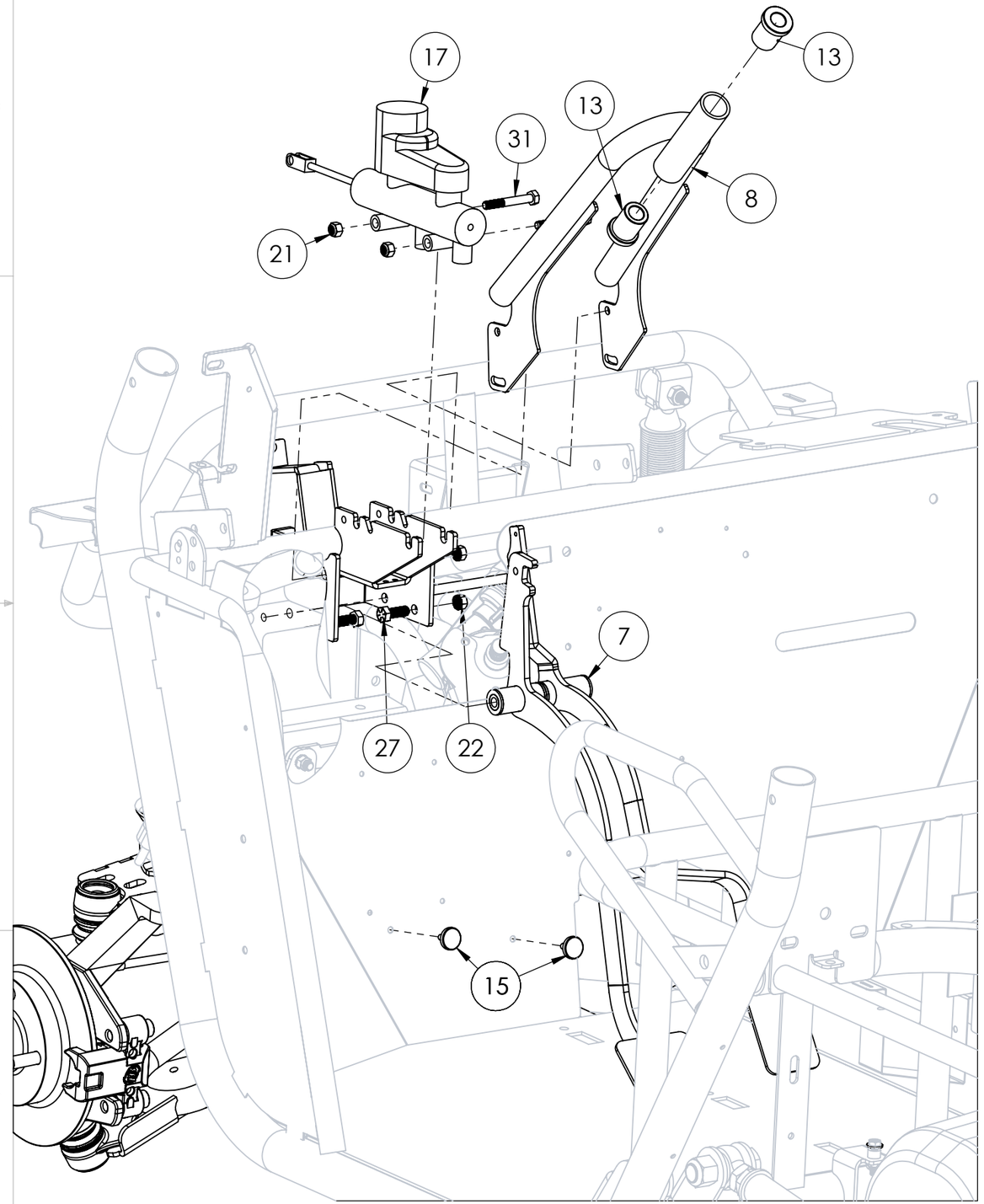

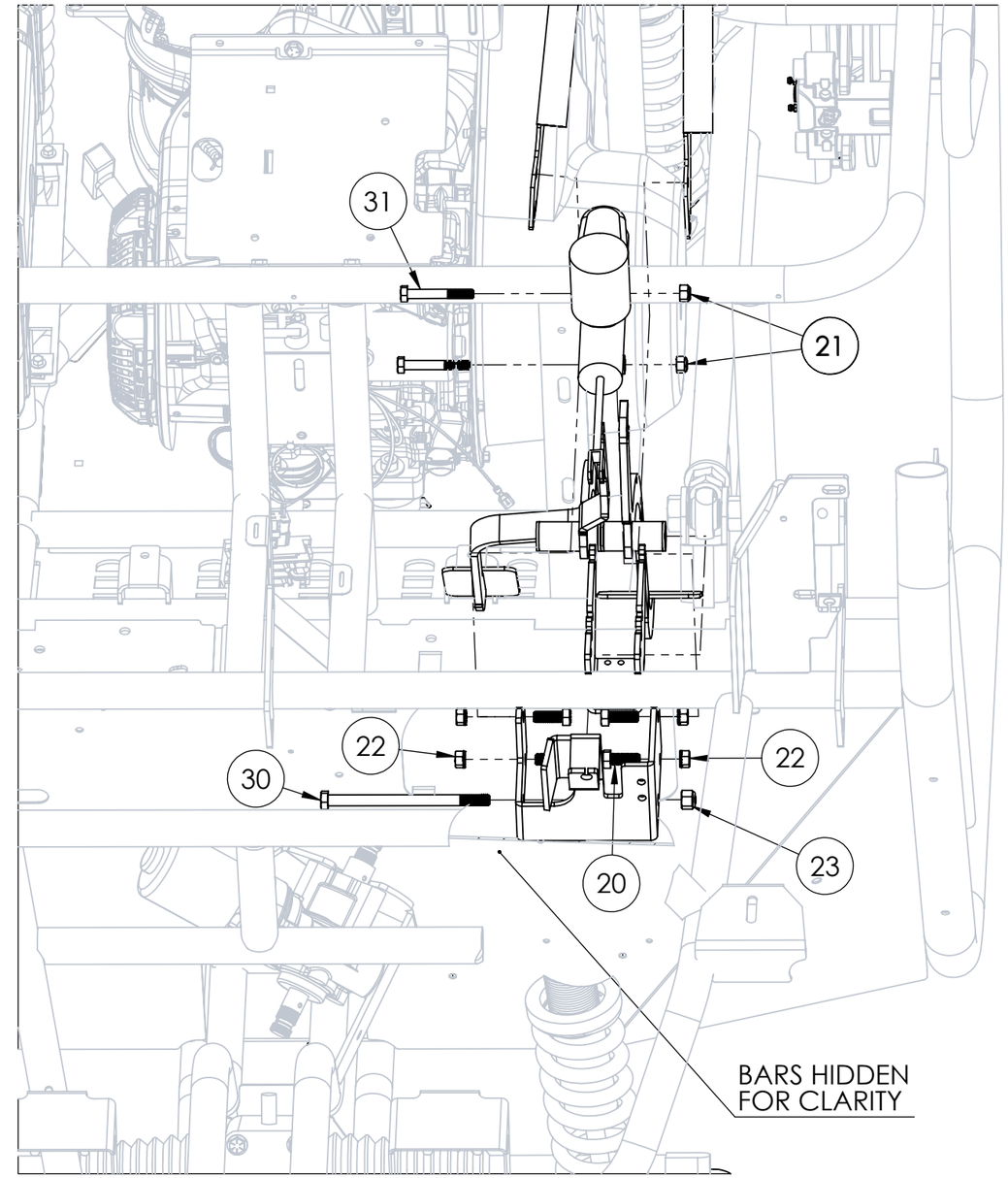

**** PRINTED VERSIONS OF THIS DOCUMENT FOR REFERENCE ONLY ****

PROPRIETARY AND CONFIDENTIAL

THE INFORMATION CONTAINED IN THIS DRAWING IS THE SOLE PROPERTY OF ASW, LLC. ANY REPRODUCTION IN PART OR AS A WHOLE WITHOUT THE WRITTEN PERMISSION OF ASW, LLC IS PROHIBITED.

UNLESS OTHERWISE SPECIFIED:
DIMENSIONS ARE IN INCHES
TOLERANCES:
FRACTIONAL ± 1/16"
ANGULAR: MACH ± 1°
X.X ± 0.05
X.XX ± 0.01
X.XXX ± 0.005 BEND ± 2°

INTERPRET GEOMETRIC TOLERANCING PER:

MATERIAL

FINISH

DO NOT SCALE DRAWING

	NAME	DATE
DRAWN	RHW	11/24/2020
CHECKED	XXX	
ENG APPR.		
MFG APPR.		
Q.A.		

COMMENTS:

AMERICAN LANDMASTER

TITLE:

STEERING SPPT AND PEDAL ASSEMBLY

SIZE	DWG. NO.	REV
B	18984 STEERING SPPT AND PEDAL ASSEMBLY	0

SCALE: 1:50 WEIGHT: SHEET 1 OF 1

REVISIONS				
REV	ECN	DESCRIPTION	DATE	APPROVED

ITEM NO.	PART NUMBER	DESCRIPTION	QTY.
1	18199-1	WDMT, A-ARM 48 LOWER-RAW	2
2	18200-1	WDMT, A-ARM 48 UPPER-RAW	2
3	2-42114	DOM, A-ARM SPACER	4
4	18191	BUSHING, 1" OD / .625" ID	8
5	18043	BALL JOINT, K7366	4
6	19867	BOLT, 7/16-20 X 1.25 HCS GR8 YZ	12
7	19868	WASHER, 3/8 IN USS FLAT WASHER YZ	12
8	19869	NUT, 7/16-20 NYLOCK NE GR8 YZ	12

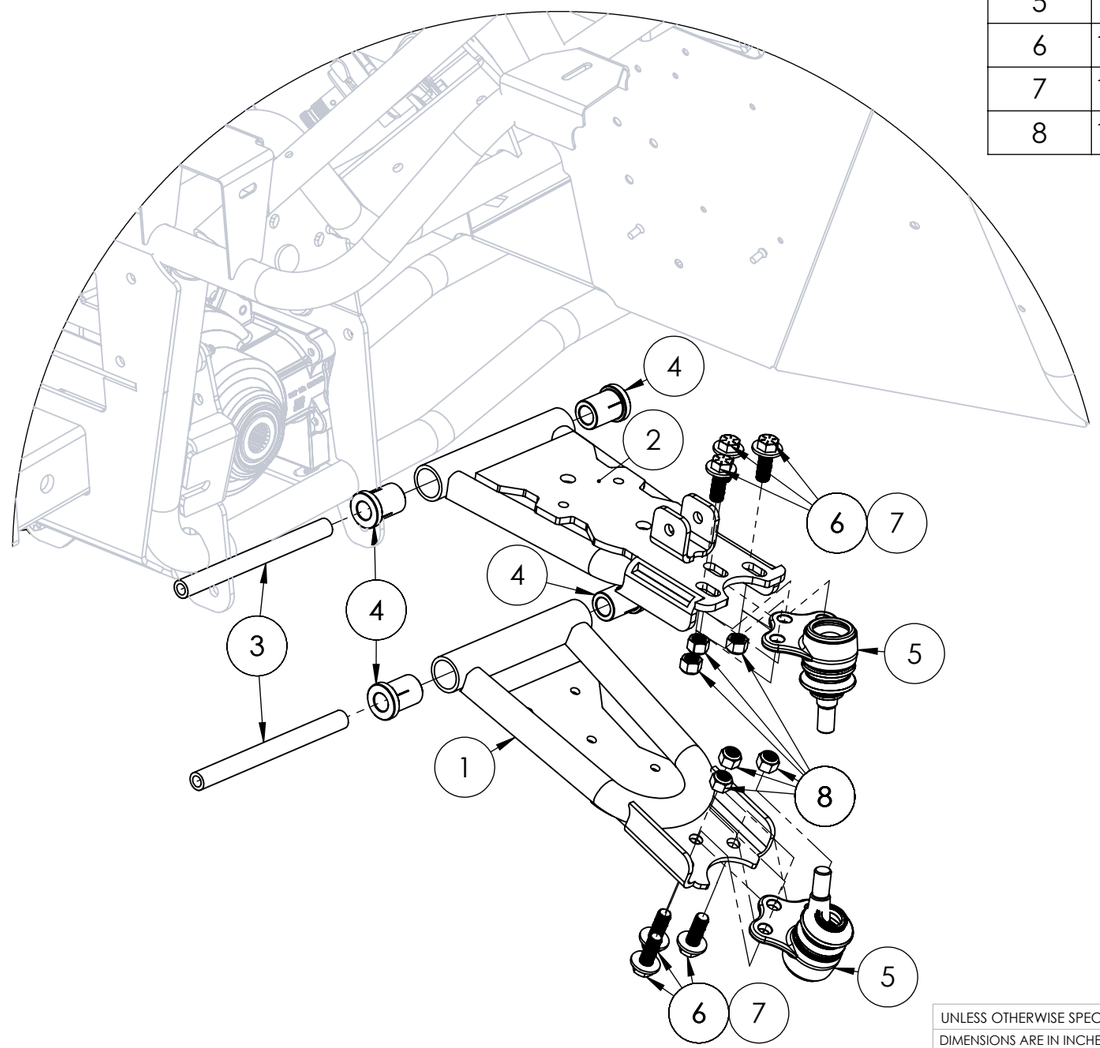

**** PRINTED VERSIONS OF THIS DOCUMENT FOR REFERENCE ONLY ****

PROPRIETARY AND CONFIDENTIAL

THE INFORMATION CONTAINED IN THIS DRAWING IS THE SOLE PROPERTY OF ASW, LLC. ANY REPRODUCTION IN PART OR AS A WHOLE WITHOUT THE WRITTEN PERMISSION OF ASW, LLC IS PROHIBITED.

UNLESS OTHERWISE SPECIFIED:
DIMENSIONS ARE IN INCHES
TOLERANCES:
FRACTIONAL ± 1/16"
ANGULAR: MACH ± 1°
X.X ± 0.05
X.XX ± 0.01
X.XXX ± 0.005 BEND ± 2°

INTERPRET GEOMETRIC TOLERANCING PER:

MATERIAL

FINISH

DO NOT SCALE DRAWING

	NAME	DATE
DRAWN	RHW	11/20/2020
CHECKED	XXX	
ENG APPR.		
MFG APPR.		
Q.A.		

COMMENTS:

AMERICAN LANDMASTER

TITLE:

UPPER/LOWER CONTROL ARMS ASSEMLBY

SIZE	DWG. NO.	REV
B	18984 UPPER LOWER CONTROL ARMS ASSEMBLY	0

SCALE: 1:50 WEIGHT: SHEET 1 OF 1

ITEM NO.	PART NUMBER	DESCRIPTION	STATION 4/QTY.
1	18378	BRAKE LINE, REAR STD	1
2	16902	BRAKE LINE, FRONT HANGING BRK	1

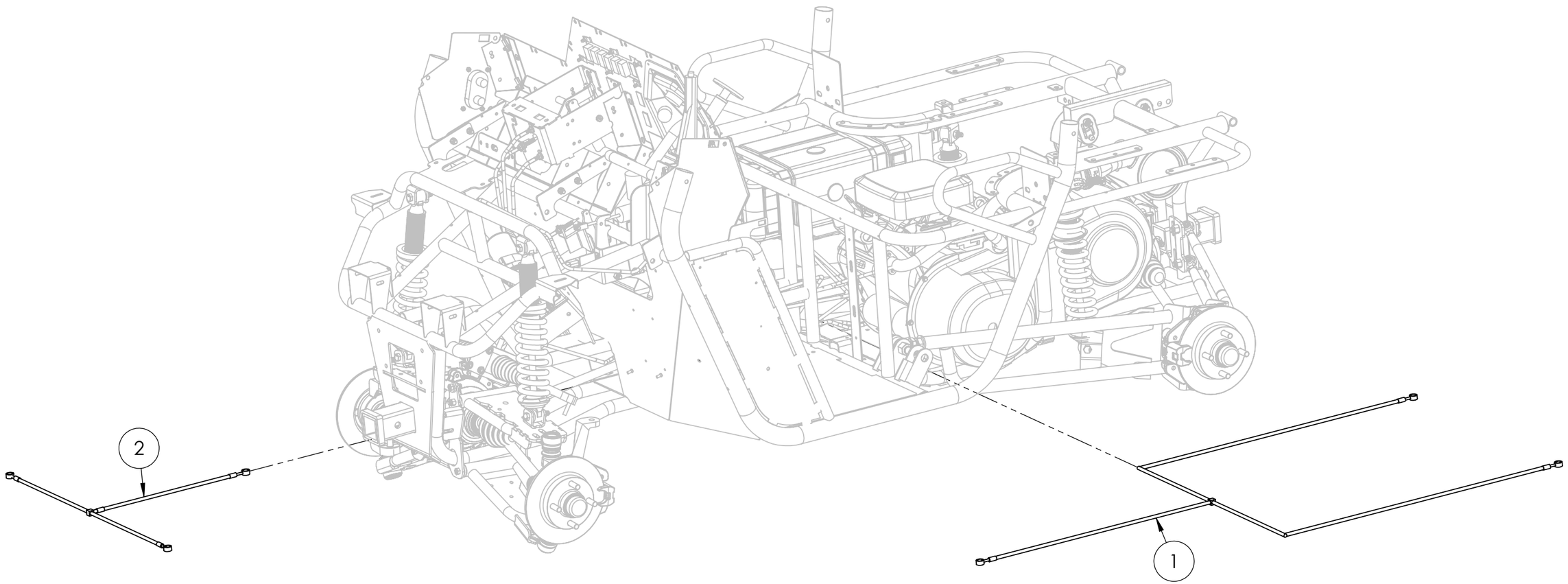

PROPRIETARY AND CONFIDENTIAL

THE INFORMATION CONTAINED IN THIS DRAWING IS THE SOLE PROPERTY OF ASW, LLC. ANY REPRODUCTION IN PART OR AS A WHOLE WITHOUT THE WRITTEN PERMISSION OF ASW, LLC IS PROHIBITED.

UNLESS OTHERWISE SPECIFIED:
DIMENSIONS ARE IN INCHES
TOLERANCES:
FRACTIONAL ± 1/16"
ANGULAR: MACH ± 1°
X.X ± 0.05
X.XX ± 0.01
X.XXX ± 0.005 BEND ± 2°

INTERPRET GEOMETRIC TOLERANCING PER:

MATERIAL

FINISH

DO NOT SCALE DRAWING

	NAME	DATE
DRAWN	RHW	5/20/2021
CHECKED	XXX	
ENG APPR.		
MFG APPR.		
Q.A.		

COMMENTS:

AMERICAN LANDMASTER

TITLE:

18984 BRAKE LINE ASSEMBLY

SIZE	DWG. NO.	REV
B	18984 BRAKE LINE ASSEMLBY	0

SCALE: 1:50 WEIGHT: SHEET 1 OF 1

**** PRINTED VERSIONS OF THIS DOCUMENT FOR REFERENCE ONLY ****

ITEM NO.	PART NUMBER	DESCRIPTION	STATION 4/QTY.
1	19287	CABLE, THROTTLE - L5	1
2	18181	CABLE, PARKING STD	1
3	18175	CABLE, DIFF LOCK STD	1
4	16437	CABLE, SHIFTER - STD CAB	1

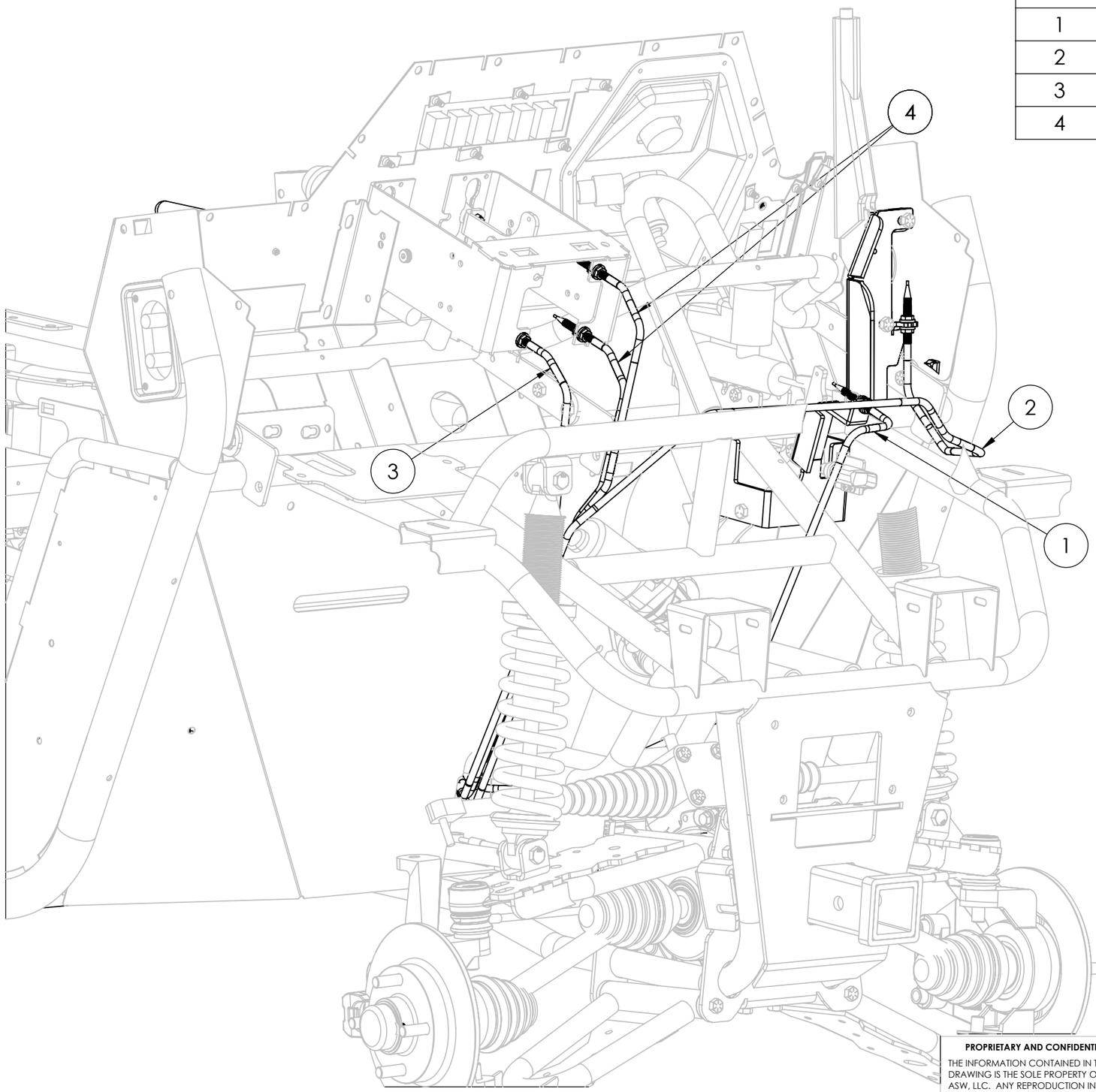

**** PRINTED VERSIONS OF THIS DOCUMENT FOR REFERENCE ONLY ****

PROPRIETARY AND CONFIDENTIAL

THE INFORMATION CONTAINED IN THIS DRAWING IS THE SOLE PROPERTY OF ASW, LLC. ANY REPRODUCTION IN PART OR AS A WHOLE WITHOUT THE WRITTEN PERMISSION OF ASW, LLC IS PROHIBITED.

UNLESS OTHERWISE SPECIFIED:
DIMENSIONS ARE IN INCHES
TOLERANCES:
FRACTIONAL ± 1/16"
ANGULAR: MACH ± 1°
X.X ± 0.05
X.XX ± 0.01
X.XXX ± 0.005 BEND ± 2°

INTERPRET GEOMETRIC TOLERANCING PER:

MATERIAL

FINISH

DO NOT SCALE DRAWING

	NAME	DATE
DRAWN	RHW	5/19/2021
CHECKED	XXX	
ENG APPR.		
MFG APPR.		
Q.A.		

COMMENTS:

AMERICAN LANDMASTER

TITLE:

18984 CABLE ASSEMBLY

SIZE	DWG. NO.	REV
B	18984 CABLE ASSEMBLY	0

SCALE: 1:50 WEIGHT: SHEET 1 OF 2

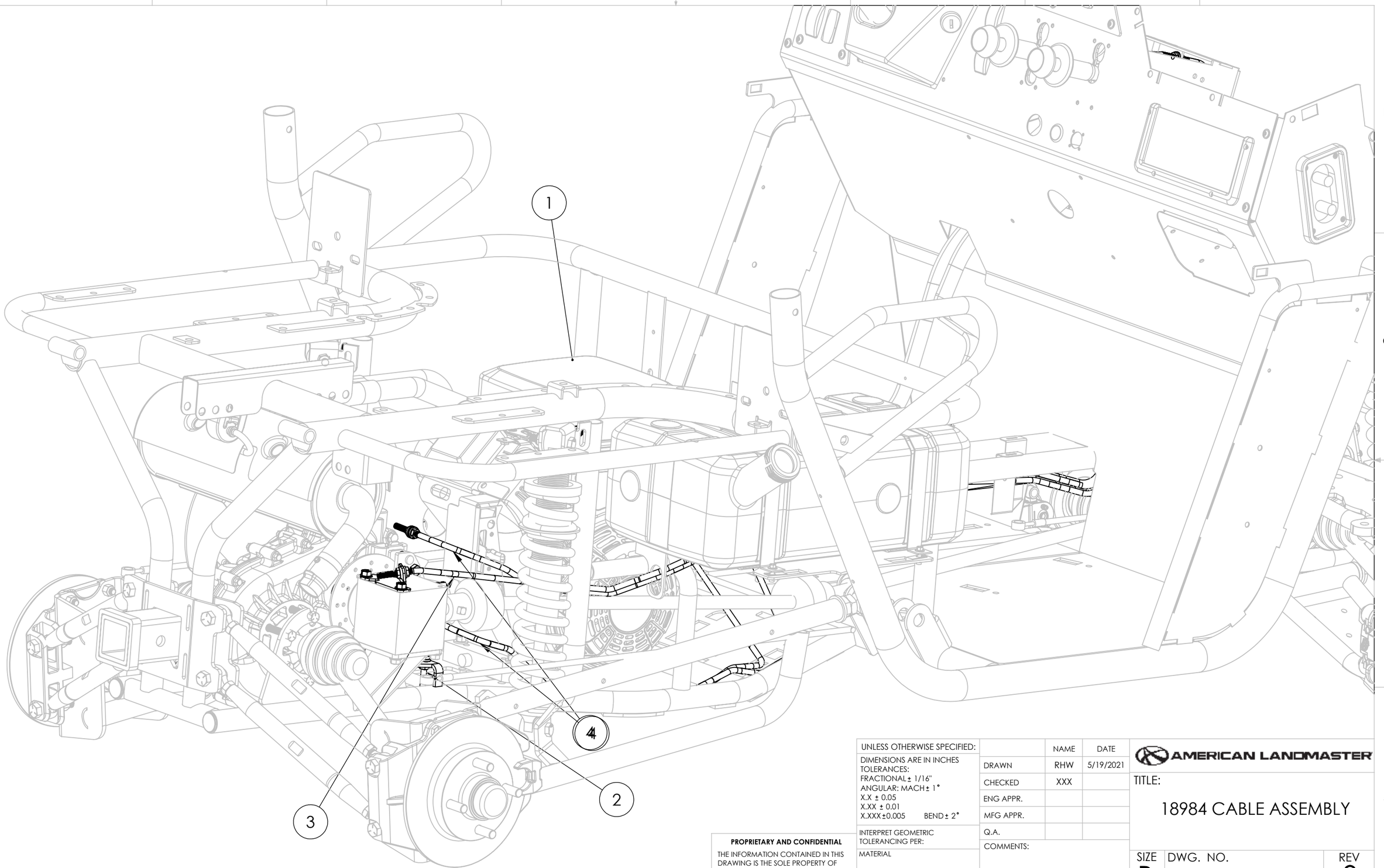

**** PRINTED VERSIONS OF THIS DOCUMENT FOR REFERENCE ONLY ****

PROPRIETARY AND CONFIDENTIAL

THE INFORMATION CONTAINED IN THIS DRAWING IS THE SOLE PROPERTY OF ASW, LLC. ANY REPRODUCTION IN PART OR AS A WHOLE WITHOUT THE WRITTEN PERMISSION OF ASW, LLC IS PROHIBITED.

UNLESS OTHERWISE SPECIFIED:
DIMENSIONS ARE IN INCHES
TOLERANCES:
FRACTIONAL ± 1/16"
ANGULAR: MACH ± 1°
X.X ± 0.05
X.XX ± 0.01
X.XXX ±0.005 BEND ± 2°

INTERPRET GEOMETRIC TOLERANCING PER:

MATERIAL

FINISH

DO NOT SCALE DRAWING

	NAME	DATE
DRAWN	RHW	5/19/2021
CHECKED	XXX	
ENG APPR.		
MFG APPR.		
Q.A.		

COMMENTS:

AMERICAN LANDMASTER

TITLE:

18984 CABLE ASSEMBLY

SIZE	DWG. NO.	REV
B	18984 CABLE ASSEMBLY	0

SCALE: 1:50 WEIGHT: SHEET 2 OF 2

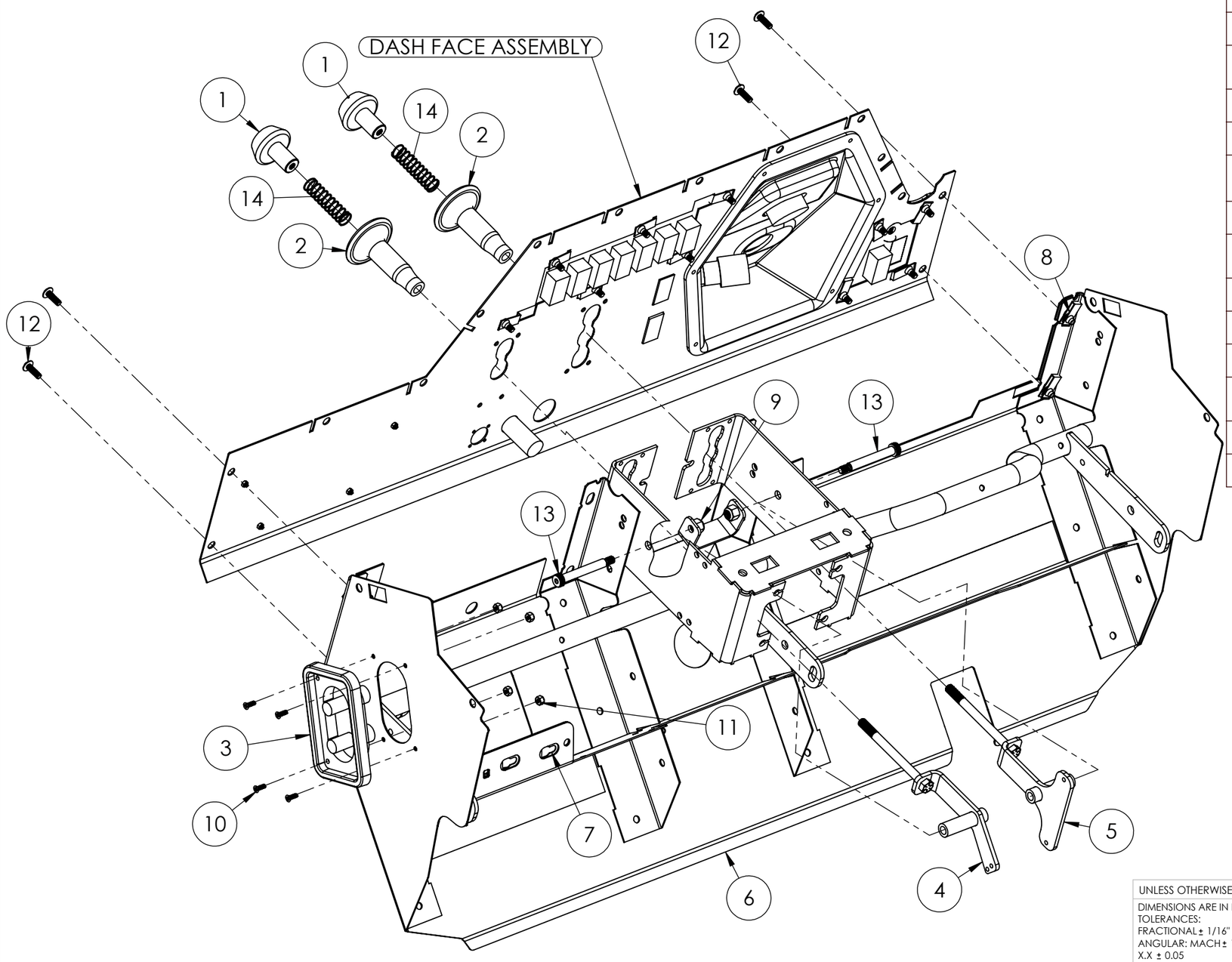

ITEM NO.	PART NUMBER	DESCRIPTION	STATION 4/QTY.
1	18095	KNOB, SHIFTER	2
2	18096	SHIFTER, LIFTER	2
3	18357	BATTERY, EZ CHARGE REMOTE STUDS	1
4	18114-2	WDMT, DIFF SHIFTER	1
5	18112-2	WDMT, FNR SHIFTER	1
6	18354-2	WDMT, LOWER DASH STRUCTURE	1
7	18347	BRKT, PDM MOUNT	1
8	15823	NUT, CLIP ON TAPPED - M6 X 1.0; 11 GA MA	4
9	2-50010	NUT, 3/8-16 NYLOCK	2
10	18695	#8-32 1/2" TAPER FHS	4
11	18694	#8-32 NYLOCK NUT	4
12	18134	SCREW, M6 X 1 X 20 WIDE FLG BUTT HD SS	4
13	18360	BOLT, SHOULDER 2.5" X 3/8"	2
14	18113	SPRING, SHIFTER	2

**** PRINTED VERSIONS OF THIS DOCUMENT FOR REFERENCE ONLY ****

PROPRIETARY AND CONFIDENTIAL

THE INFORMATION CONTAINED IN THIS DRAWING IS THE SOLE PROPERTY OF ASW, LLC. ANY REPRODUCTION IN PART OR AS A WHOLE WITHOUT THE WRITTEN PERMISSION OF ASW, LLC IS PROHIBITED.

UNLESS OTHERWISE SPECIFIED:
DIMENSIONS ARE IN INCHES
TOLERANCES:
FRACTIONAL ± 1/16"
ANGULAR: MACH ± 1°
X.X ± 0.05
X.XX ± 0.01
X.XXX ± 0.005 BEND ± 2°

INTERPRET GEOMETRIC TOLERANCING PER:

MATERIAL

FINISH

DO NOT SCALE DRAWING

	NAME	DATE
DRAWN	RHW	11/24/2020
CHECKED	XXX	
ENG APPR.		
MFG APPR.		
Q.A.		

COMMENTS:

AMERICAN LANDMASTER

TITLE:

DASH ASSEMBLY 1

SIZE	DWG. NO.	REV
B	18984 DASH ASSEMBLY1	0

SCALE: 1:20 WEIGHT: SHEET 1 OF 1

ITEM NO.	PART NUMBER	DESCRIPTION	STATION 4/QTY.
1	18190-2	WDMT, FRAME IRS STD CHASSIS	1
2	18387	LEVER, PARK BRAKE	1
3	2-50005	NUT, 5/16-18 KEPS	8
4	2-50150	BOLT, 5/16-18 X 1 HEX HEAD G5	8

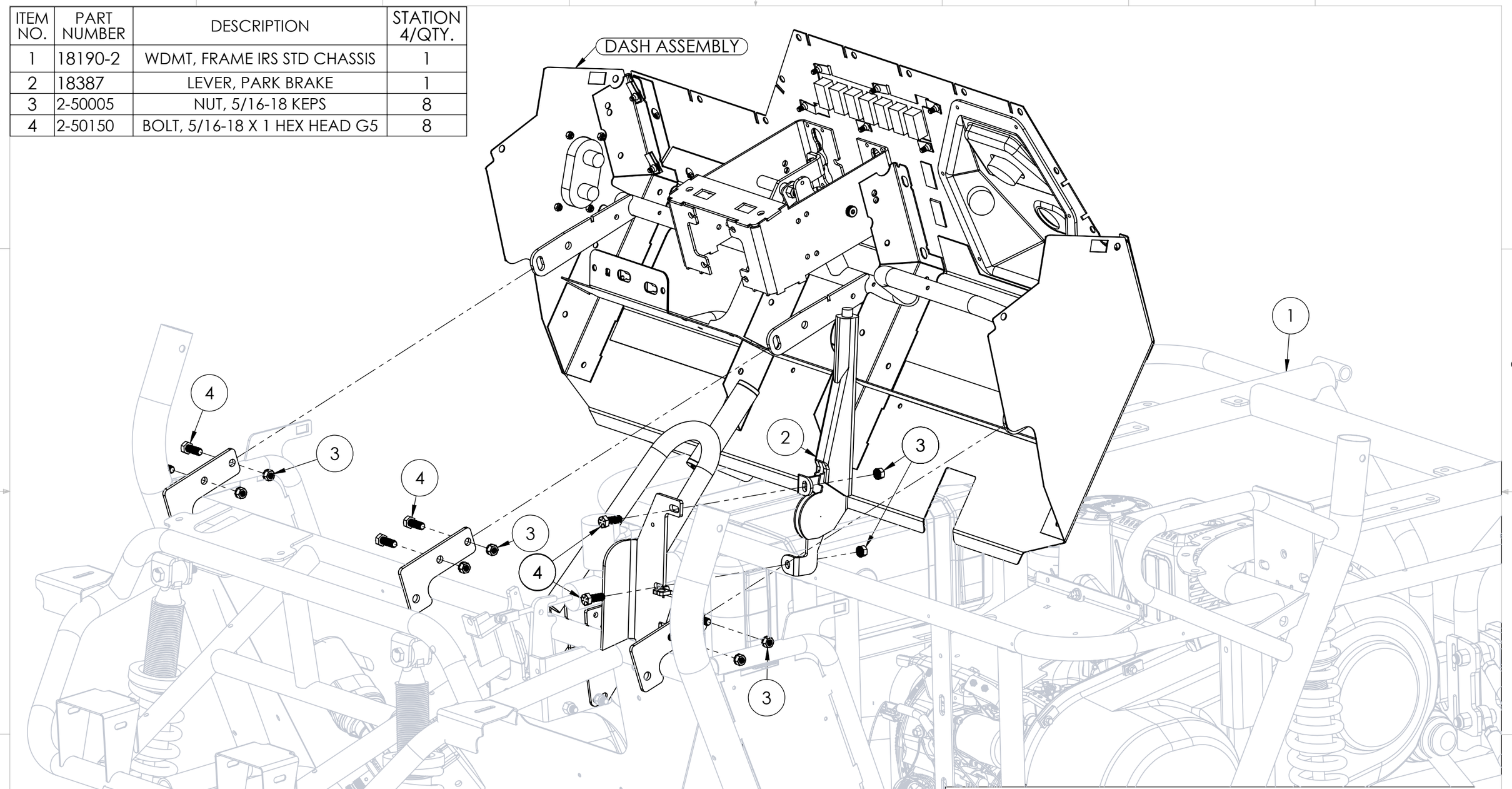

PROPRIETARY AND CONFIDENTIAL

THE INFORMATION CONTAINED IN THIS DRAWING IS THE SOLE PROPERTY OF ASW, LLC. ANY REPRODUCTION IN PART OR AS A WHOLE WITHOUT THE WRITTEN PERMISSION OF ASW, LLC IS PROHIBITED.

UNLESS OTHERWISE SPECIFIED:
DIMENSIONS ARE IN INCHES
TOLERANCES:
FRACTIONAL ± 1/16"
ANGULAR: MACH ± 1°
X.X ± 0.05
X.XX ± 0.01
X.XXX ± 0.005 BEND ± 2°

INTERPRET GEOMETRIC TOLERANCING PER:

MATERIAL

FINISH

DO NOT SCALE DRAWING

	NAME	DATE
DRAWN	RHW	11/24/2020
CHECKED	XXX	
ENG APPR.		
MFG APPR.		
Q.A.		

COMMENTS:

AMERICAN LANDMASTER

TITLE:

DASH ASSEMBLY 2

SIZE	DWG. NO.	REV
B	18984 DASH ASSEMBLY2	0
SCALE: 1:50	WEIGHT:	SHEET 1 OF 1

**** PRINTED VERSIONS OF THIS DOCUMENT FOR REFERENCE ONLY ****

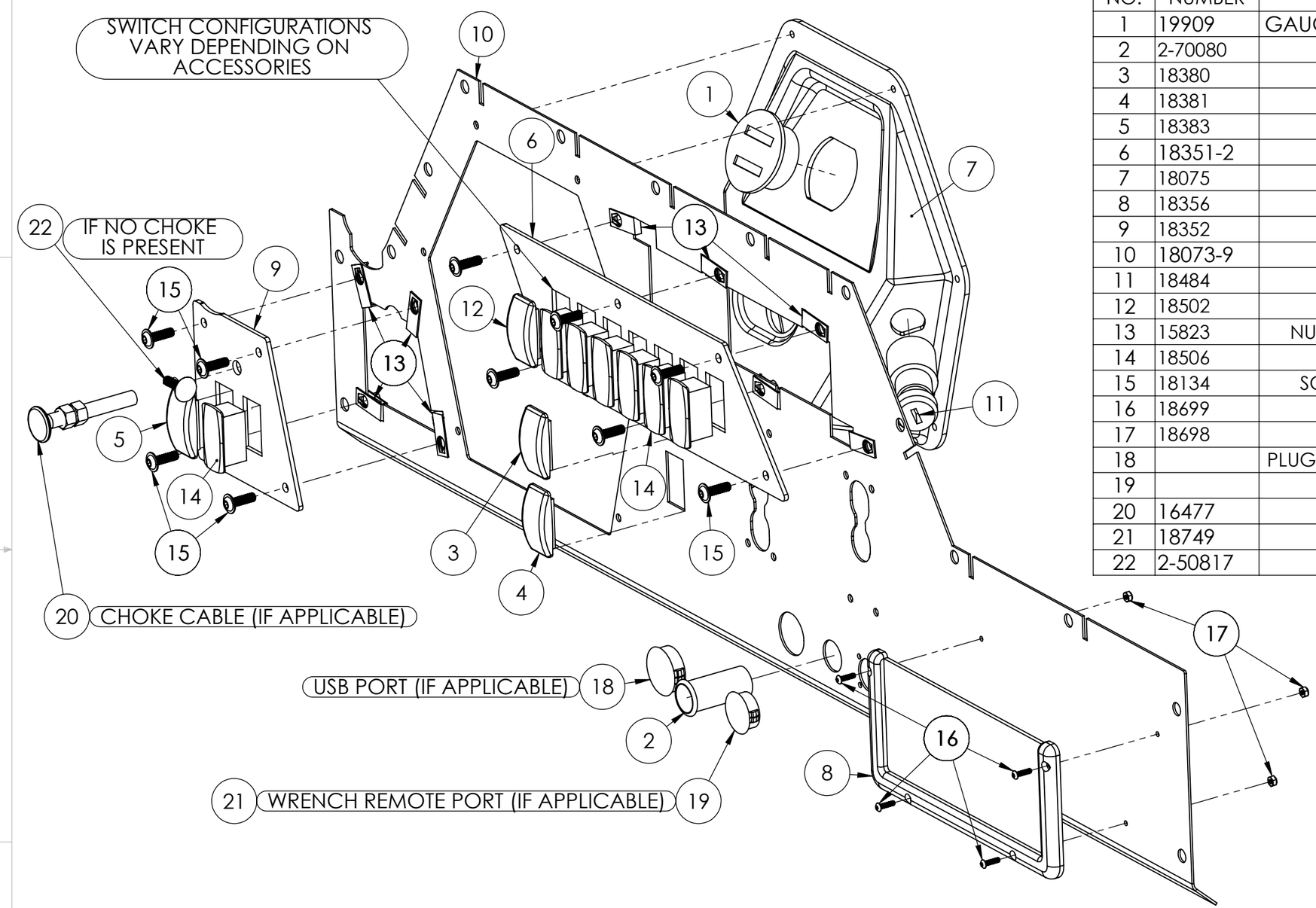

ITEM NO.	PART NUMBER	DESCRIPTION	STATION 4/QTY.
1	19909	GAUGE, 12V BATT VOLT/HOUR COMBO RND	1
2	2-70080	OUTLET, ACCESSORY-12V DC POWER	1
3	18380	LIGHT, WARNING ENGINE/OIL	1
4	18381	LIGHT, WARNING PARK/SEATBELT	1
5	18383	SWITCH, FLOOD/HEADLIGHT	1
6	18351-2	BRKT, 7 SWITCH PANEL	1
7	18075	DASH, STEERING COLUMN - ABS BLK	1
8	18356	NET, 4X9	1
9	18352	BRKT, LOWER DASH PANEL	1
10	18073-9	BRKT, DASH FACE	1
11	18484	SWITCH, IGNITION	1
12	18502	SWITCH, ROCKER, 2WD/4WD	1
13	15823	NUT, CLIP ON TAPPED - M6 X 1.0; 11 GA MA	10
14	18506	ROCKER SWITCH HOLE PLUG	7
15	18134	SCREW, M6 X 1 X 20 WIDE FLG BUTT HD SS	10
16	18699	BOLT, #5-40 - 1/2 LONG	4
17	18698	NUT, #5-40 NYLOCK	4
18		PLUG, LOCKING PANEL PLUG 1-3/16IN THICK,BLK	1
19		PLASTIC PLUG	1
20	16477	CABLE, CHOKE - 116" LONG	1
21	18749	WRENCH PORT CAP	1
22	2-50817	PIN, PUSH-IN - PLASTIC	1

**** PRINTED VERSIONS OF THIS DOCUMENT FOR REFERENCE ONLY ****

PROPRIETARY AND CONFIDENTIAL

THE INFORMATION CONTAINED IN THIS DRAWING IS THE SOLE PROPERTY OF ASW, LLC. ANY REPRODUCTION IN PART OR AS A WHOLE WITHOUT THE WRITTEN PERMISSION OF ASW, LLC IS PROHIBITED.

UNLESS OTHERWISE SPECIFIED:
DIMENSIONS ARE IN INCHES
TOLERANCES:
FRACTIONAL ± 1/16"
ANGULAR: MACH ± 1°
X.X ± 0.05
X.XX ± 0.01
X.XXX ± 0.005 BEND ± 2°

INTERPRET GEOMETRIC TOLERANCING PER:

MATERIAL

FINISH

DO NOT SCALE DRAWING

	NAME	DATE
DRAWN	RHW	11/24/2020
CHECKED	XXX	
ENG APPR.		
MFG APPR.		
Q.A.		

COMMENTS:

AMERICAN LANDMASTER

TITLE:

DASH FACE ASSEMBLY

SIZE	DWG. NO.	REV
B	18984 DASH FACE ASSEMBLY	0

SCALE: 1:10 WEIGHT: SHEET 1 OF 1

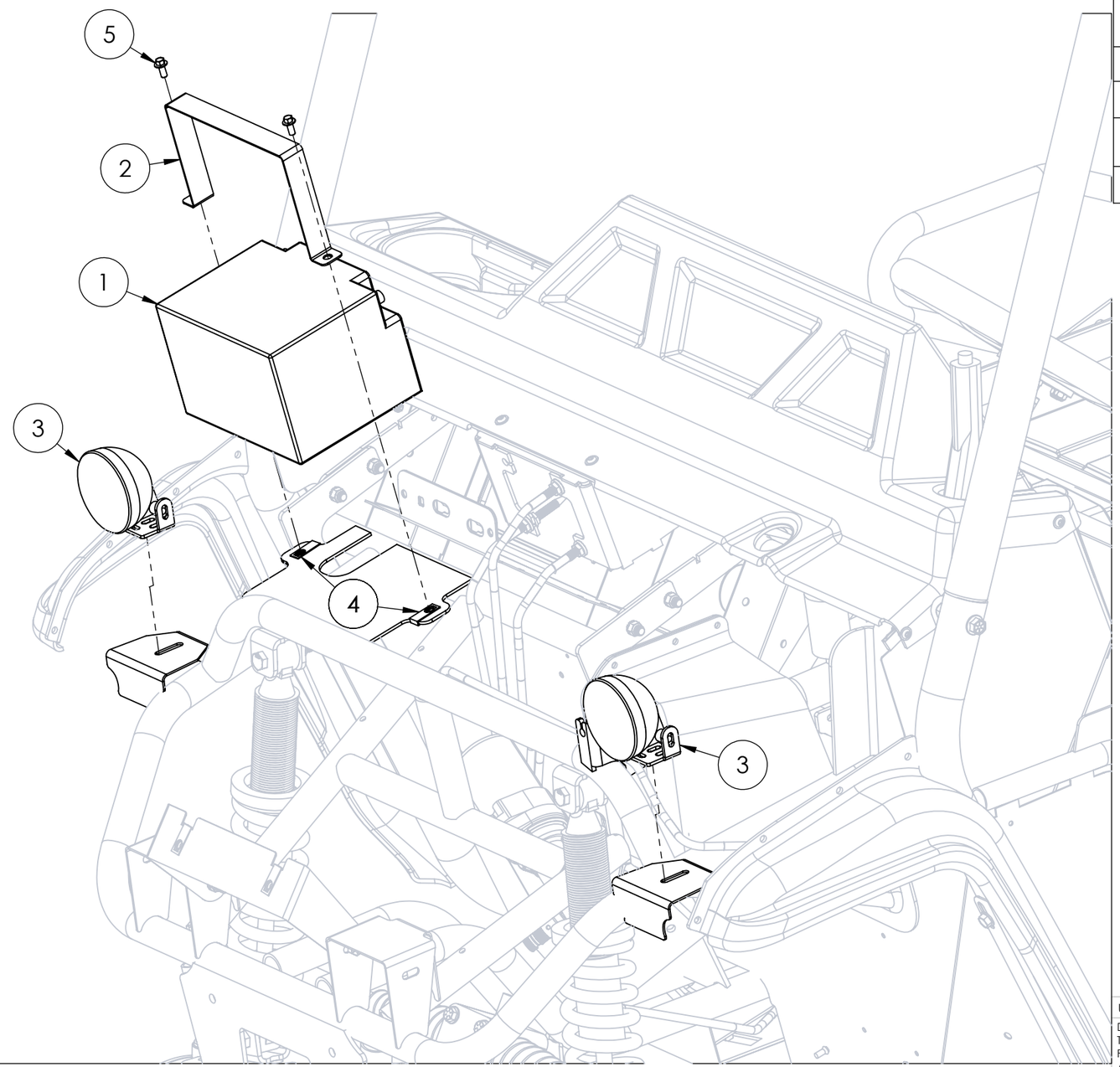

ITEM NO.	PART NUMBER	DESCRIPTION	STATION 6/QTY.
1	2-69998	BATTERY, UB12350 SEALED AGM - 315CCA	1
2	18126-2	BRKT, BATTERY HOLD DOWN 2021	1
3	18609	LIGHT, HEAD LIGHT / WORK LIGHT	2
4	15823	NUT, CLIP ON TAPPED - M6 X 1.0; 11 GA MA	2
5	14426	BOLT, M6 X 1.0 X 14	2

**** PRINTED VERSIONS OF THIS DOCUMENT FOR REFERENCE ONLY ****

PROPRIETARY AND CONFIDENTIAL

THE INFORMATION CONTAINED IN THIS DRAWING IS THE SOLE PROPERTY OF ASW, LLC. ANY REPRODUCTION IN PART OR AS A WHOLE WITHOUT THE WRITTEN PERMISSION OF ASW, LLC IS PROHIBITED.

UNLESS OTHERWISE SPECIFIED:
DIMENSIONS ARE IN INCHES
TOLERANCES:
FRACTIONAL ± 1/16"
ANGULAR: MACH ± 1°
X.X ± 0.05
X.XX ± 0.01
X.XXX ± 0.005 BEND ± 2°

INTERPRET GEOMETRIC TOLERANCING PER:

MATERIAL

FINISH

DO NOT SCALE DRAWING

	NAME	DATE
DRAWN	RHW	11/24/2020
CHECKED	XXX	
ENG APPR.		
MFG APPR.		
Q.A.		

COMMENTS:

AMERICAN LANDMASTER

TITLE:

BATTERY AND LIGHTS ASSEMBLY

SIZE	DWG. NO.	REV
B	18984 BATTERY AND LIGHTS ASSEMBLY	0

SCALE: 1:50 WEIGHT: SHEET 1 OF 1

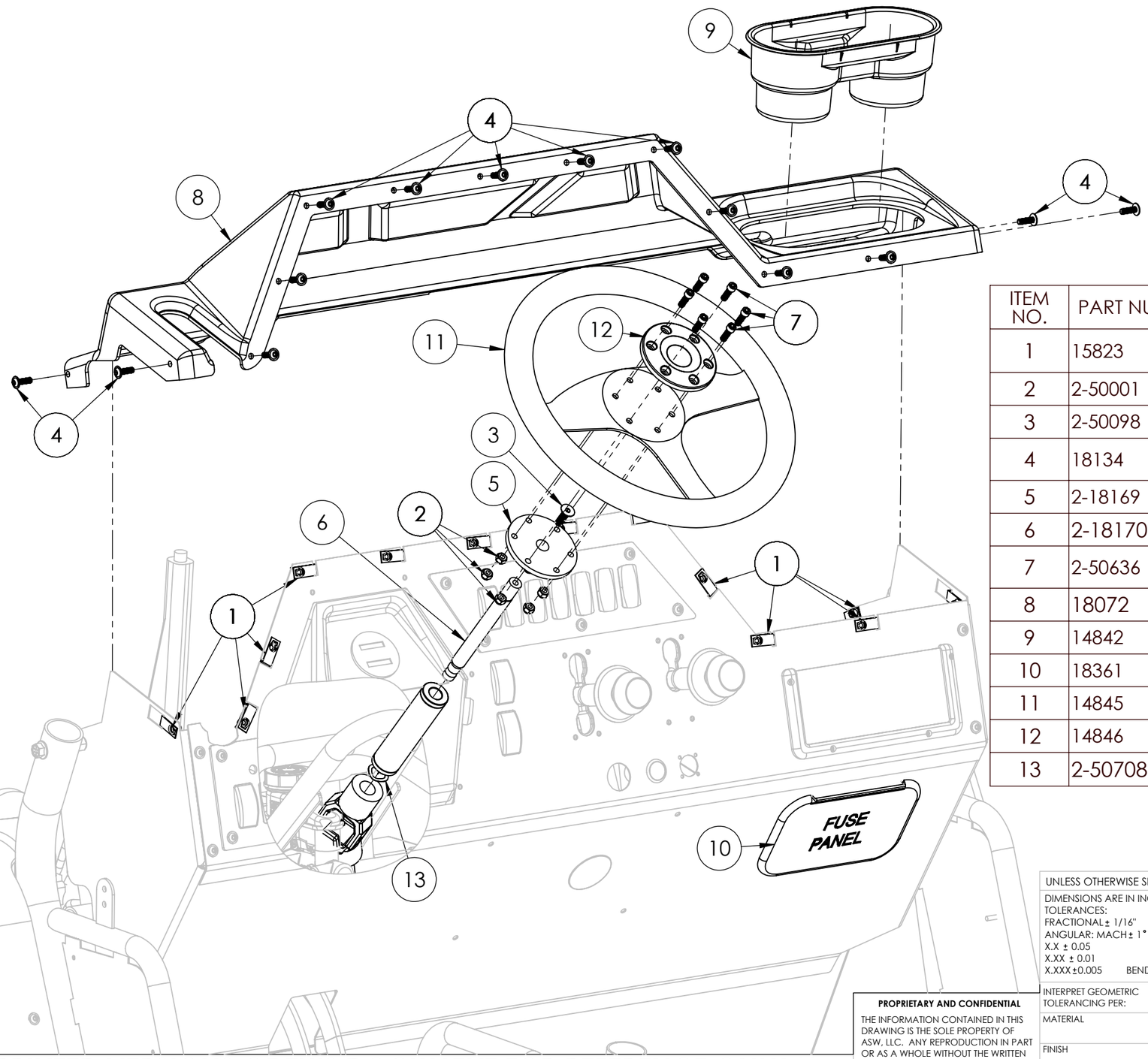

ITEM NO.	PART NUMBER	DESCRIPTION	QTY.
1	15823	NUT, CLIP ON TAPPED - M6 X 1.0; 11 GA MA	14
2	2-50001	NUT, 1/4-20 NYLON LOCKING	6
3	2-50098	BOLT, TAPERED 5/16-18 X 1IN	1
4	18134	SCREW, M6 X 1 X 20 WIDE FLG BUTT HD SS	14
5	2-18169	STEERING HUB DISK (SEE SPECS)	1
6	2-18170	STEERING HUB SHAFT	1
7	2-50636	BOLT, 1/4IN X 3/4IN SOCKET HEAD (SS)	6
8	18072	DASH, THERMOFORMED TOP	1
9	14842	CUP HOLDER - 200 SERIES	1
10	18361	PANEL, DASH ACCESS	1
11	14845	STEERING WHEEL - 200S	1
12	14846	CAP, STEERING WHEEL BLK - 200S	1
13	2-50708	WASHER, 0.642in ID x 1in OD - WAVE	1

**** PRINTED VERSIONS OF THIS DOCUMENT FOR REFERENCE ONLY ****

PROPRIETARY AND CONFIDENTIAL

THE INFORMATION CONTAINED IN THIS DRAWING IS THE SOLE PROPERTY OF ASW, LLC. ANY REPRODUCTION IN PART OR AS A WHOLE WITHOUT THE WRITTEN PERMISSION OF ASW, LLC IS PROHIBITED.

UNLESS OTHERWISE SPECIFIED:
DIMENSIONS ARE IN INCHES
TOLERANCES:
FRACTIONAL ± 1/16"
ANGULAR: MACH ± 1°
X.X ± 0.05
X.XX ± 0.01
X.XXX ± 0.005 BEND ± 2°

INTERPRET GEOMETRIC TOLERANCING PER:

MATERIAL

FINISH

DO NOT SCALE DRAWING

	NAME	DATE
DRAWN	RHW	6/20/2022
CHECKED	XXX	
ENG APPR.		
MFG APPR.		
Q.A.		

COMMENTS:

AMERICAN LANDMASTER

SIZE	DWG. NO.	REV
B	18984 DASH TOP & STEERING WHEEL ASSEMBLY	0

SCALE: 1:50 WEIGHT: SHEET 1 OF 1

ITEM NO.	PART NUMBER	DESCRIPTION	STATION 6/QTY.
1	18133-2	BRKT, FRONT FENDER	2
2	18754	FENDER, FRONT LH - 48	1
3	18755	FENDER, FRONT RH - 48	1
4	15823	NUT, CLIP ON TAPPED - M6 X 1.0; 11 GA MA	6
5	18134	SCREW, M6 X 1 X 20 WIDE FLG BUTT HD SS	6
6	19076	SCREW, 5/16 X1.00 UNSLT HWSDS	4

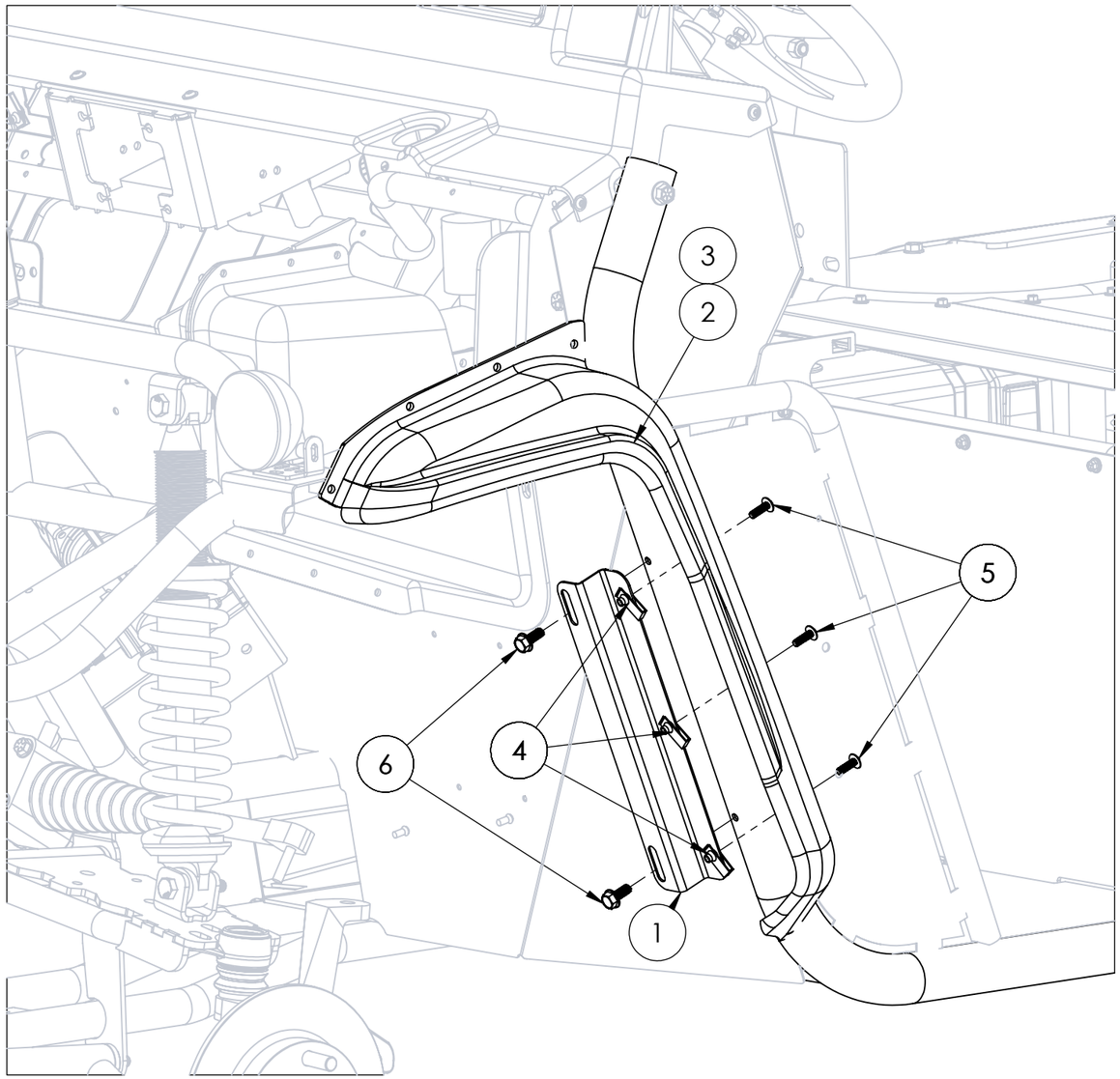

**** PRINTED VERSIONS OF THIS DOCUMENT FOR REFERENCE ONLY ****

PROPRIETARY AND CONFIDENTIAL

THE INFORMATION CONTAINED IN THIS DRAWING IS THE SOLE PROPERTY OF ASW, LLC. ANY REPRODUCTION IN PART OR AS A WHOLE WITHOUT THE WRITTEN PERMISSION OF ASW, LLC IS PROHIBITED.

UNLESS OTHERWISE SPECIFIED:
DIMENSIONS ARE IN INCHES
TOLERANCES:
FRACTIONAL ± 1/16"
ANGULAR: MACH ± 1°
X.X ± 0.05
X.XX ± 0.01
X.XXX ± 0.005 BEND ± 2°

INTERPRET GEOMETRIC TOLERANCING PER:

MATERIAL

FINISH

DO NOT SCALE DRAWING

	NAME	DATE
DRAWN	RHW	11/25/2020
CHECKED	XXX	
ENG APPR.		
MFG APPR.		
Q.A.		

COMMENTS:

AMERICAN LANDMASTER

TITLE:

FRONT FENDER ASSEMBLY

SIZE	DWG. NO.	REV
B	18984 FRONT FENDER ASSEMBLY	0

SCALE: 1:50 WEIGHT: SHEET 1 OF 1

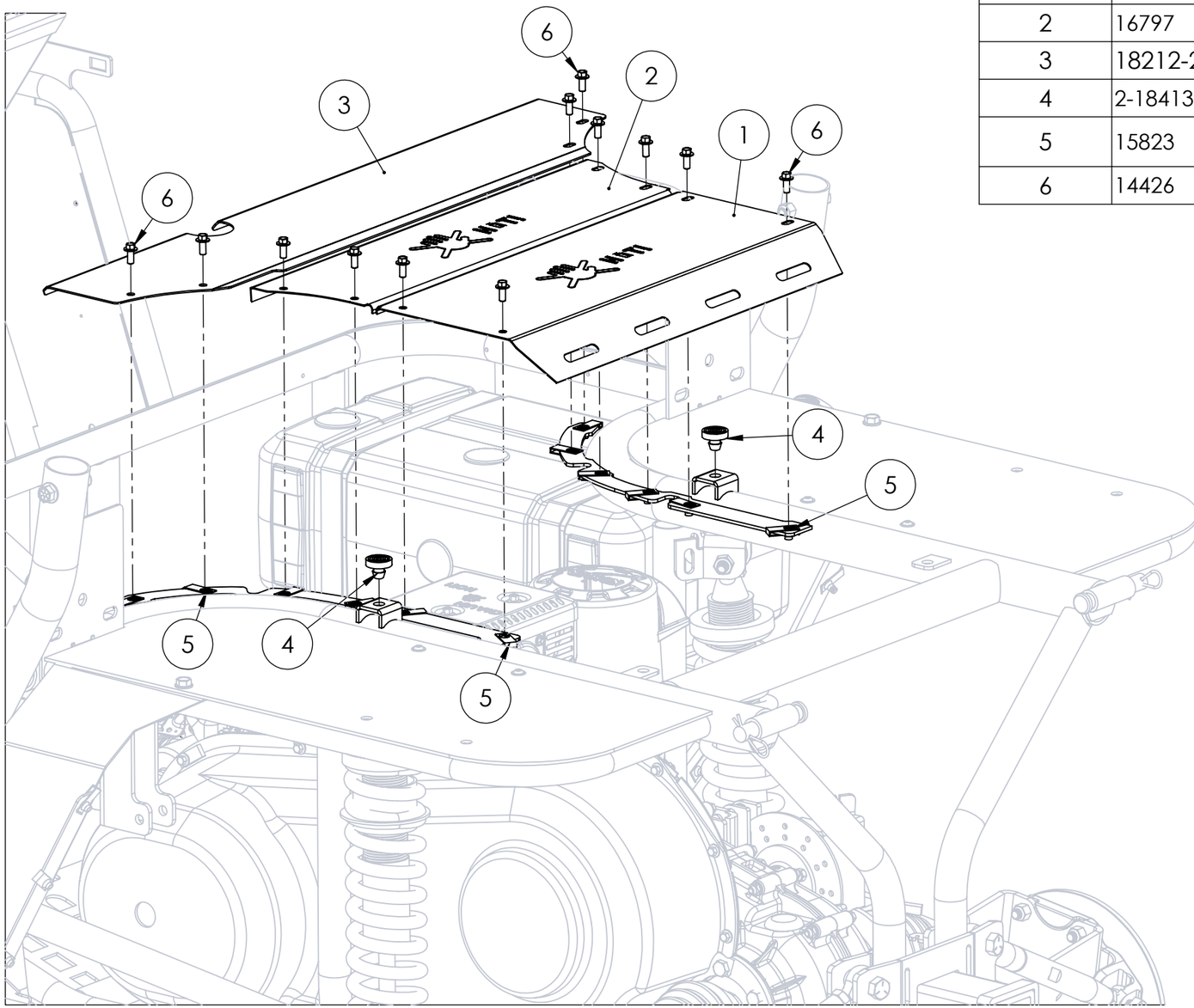

ITEM NO.	PART NUMBER	DESCRIPTION	STATION 6/QTY.
1	16787	PLATE, HEAT SHIELD 2WD - REAR	1
2	16797	PLATE, HEAT SHIELD - 4WD - FWD	1
3	18212-2	SHIELD, UNDERSEAT - BLK	1
4	2-18413	BED BUMPER 1.5 INCH (RUBBER)	2
5	15823	NUT, CLIP ON TAPPED - M6 X 1.0; 11 GA MA	12
6	14426	BOLT, M6 X 1.0 X 14	12

**** PRINTED VERSIONS OF THIS DOCUMENT FOR REFERENCE ONLY ****

PROPRIETARY AND CONFIDENTIAL

THE INFORMATION CONTAINED IN THIS DRAWING IS THE SOLE PROPERTY OF ASW, LLC. ANY REPRODUCTION IN PART OR AS A WHOLE WITHOUT THE WRITTEN PERMISSION OF ASW, LLC IS PROHIBITED.

UNLESS OTHERWISE SPECIFIED:
DIMENSIONS ARE IN INCHES
TOLERANCES:
FRACTIONAL ± 1/16"
ANGULAR: MACH ± 1°
X.X ± 0.05
X.XX ± 0.01
X.XXX ± 0.005 BEND ± 2°

INTERPRET GEOMETRIC TOLERANCING PER:

MATERIAL

FINISH

DO NOT SCALE DRAWING

	NAME	DATE
DRAWN	RHW	11/25/2020
CHECKED	XXX	
ENG APPR.		
MFG APPR.		
Q.A.		

COMMENTS:

AMERICAN LANDMASTER

TITLE:

HEAT SHEILDS ASSEMBLY

SIZE	DWG. NO.	REV
B	18984 HEAT SHEILDS ASSEMBLY	0

SCALE: 1:50 WEIGHT: SHEET 1 OF 1

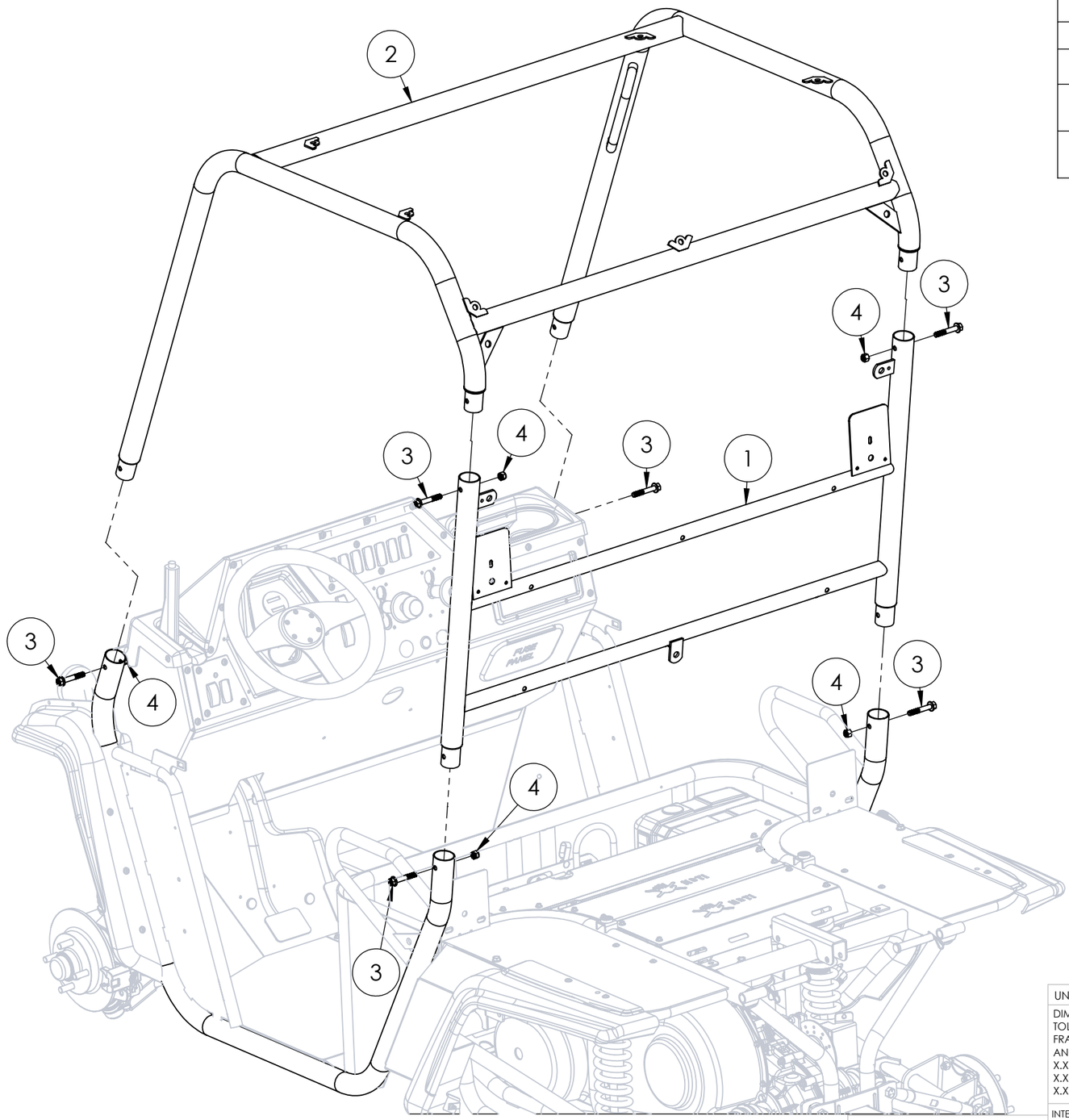

ITEM NO.	PART NUMBER	DESCRIPTION	STATION 6/QTY.
1	18362-2	WDMT, OH B PILLAR - MY21 - BLK	1
2	18551-2	WDMT, OH ROPS MY21 - BLK	1
3	19018	BOLT, 3/8"-16 X 2.25" FLANGE HEAD BLACK GRADE 5	6
4	19019	NUT, 3/8"-16 NYLON INSERT GRADE 5 BLACK FLANGE NYLOCK	6

**** PRINTED VERSIONS OF THIS DOCUMENT FOR REFERENCE ONLY ****

PROPRIETARY AND CONFIDENTIAL

THE INFORMATION CONTAINED IN THIS DRAWING IS THE SOLE PROPERTY OF ASW, LLC. ANY REPRODUCTION IN PART OR AS A WHOLE WITHOUT THE WRITTEN PERMISSION OF ASW, LLC IS PROHIBITED.

UNLESS OTHERWISE SPECIFIED:
DIMENSIONS ARE IN INCHES
TOLERANCES:
FRACTIONAL ± 1/16"
ANGULAR: MACH ± 1°
X.X ± 0.05
X.XX ± 0.01
X.XXX ± 0.005 BEND ± 2°

INTERPRET GEOMETRIC TOLERANCING PER:

MATERIAL

FINISH

DO NOT SCALE DRAWING

	NAME	DATE
DRAWN	RHW	11/25/2020
CHECKED	XXX	
ENG APPR.		
MFG APPR.		
Q.A.		

COMMENTS:

AMERICAN LANDMASTER

TITLE:

OH BARS ASSEMBLY

SIZE	DWG. NO.	REV
B	18984 OH BARS ASSEMBLY	0

SCALE: 1:50 WEIGHT: SHEET 1 OF 1

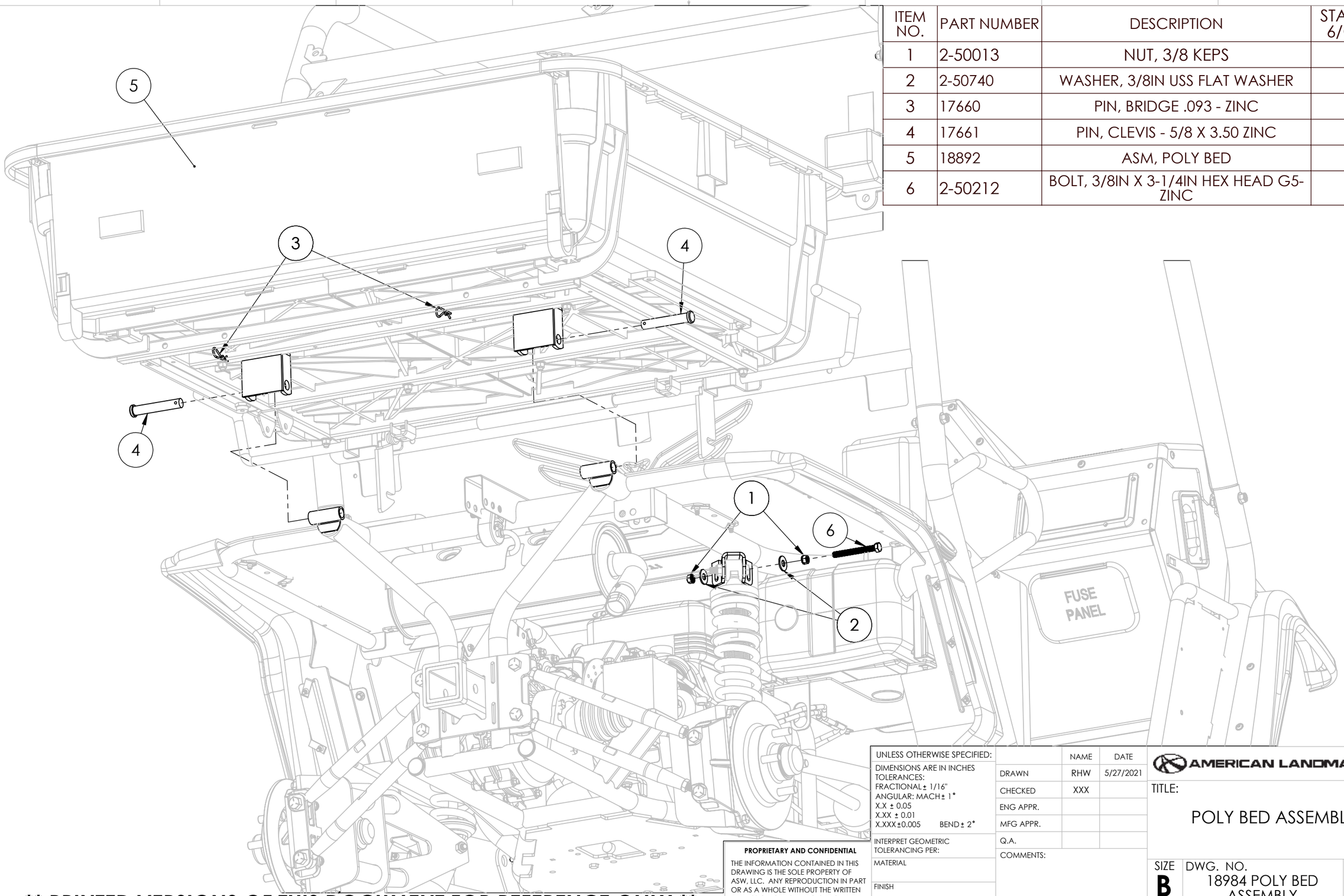

ITEM NO.	PART NUMBER	DESCRIPTION	STATION 6/QTY.
1	2-50013	NUT, 3/8 KEPS	4
2	2-50740	WASHER, 3/8IN USS FLAT WASHER	4
3	17660	PIN, BRIDGE .093 - ZINC	2
4	17661	PIN, CLEVIS - 5/8 X 3.50 ZINC	2
5	18892	ASM, POLY BED	1
6	2-50212	BOLT, 3/8IN X 3-1/4IN HEX HEAD G5-ZINC	2

UNLESS OTHERWISE SPECIFIED:
DIMENSIONS ARE IN INCHES
TOLERANCES:
FRACTIONAL ± 1/16"
ANGULAR: MACH ± 1°
X.X ± 0.05
X.XX ± 0.01
X.XXX ± 0.005 BEND ± 2°

INTERPRET GEOMETRIC TOLERANCING PER:

MATERIAL

FINISH

DO NOT SCALE DRAWING

	NAME	DATE
DRAWN	RHW	5/27/2021
CHECKED	XXX	
ENG APPR.		
MFG APPR.		
Q.A.		

COMMENTS:

PROPRIETARY AND CONFIDENTIAL

THE INFORMATION CONTAINED IN THIS DRAWING IS THE SOLE PROPERTY OF ASW, LLC. ANY REPRODUCTION IN PART OR AS A WHOLE WITHOUT THE WRITTEN PERMISSION OF ASW, LLC IS PROHIBITED.

AMERICAN LANDMASTER

TITLE:

POLY BED ASSEMBLY

SIZE	DWG. NO.	REV
B	18984 POLY BED ASSEMBLY	0

SCALE: 1:50 WEIGHT: SHEET 1 OF 1

**** PRINTED VERSIONS OF THIS DOCUMENT FOR REFERENCE ONLY ****

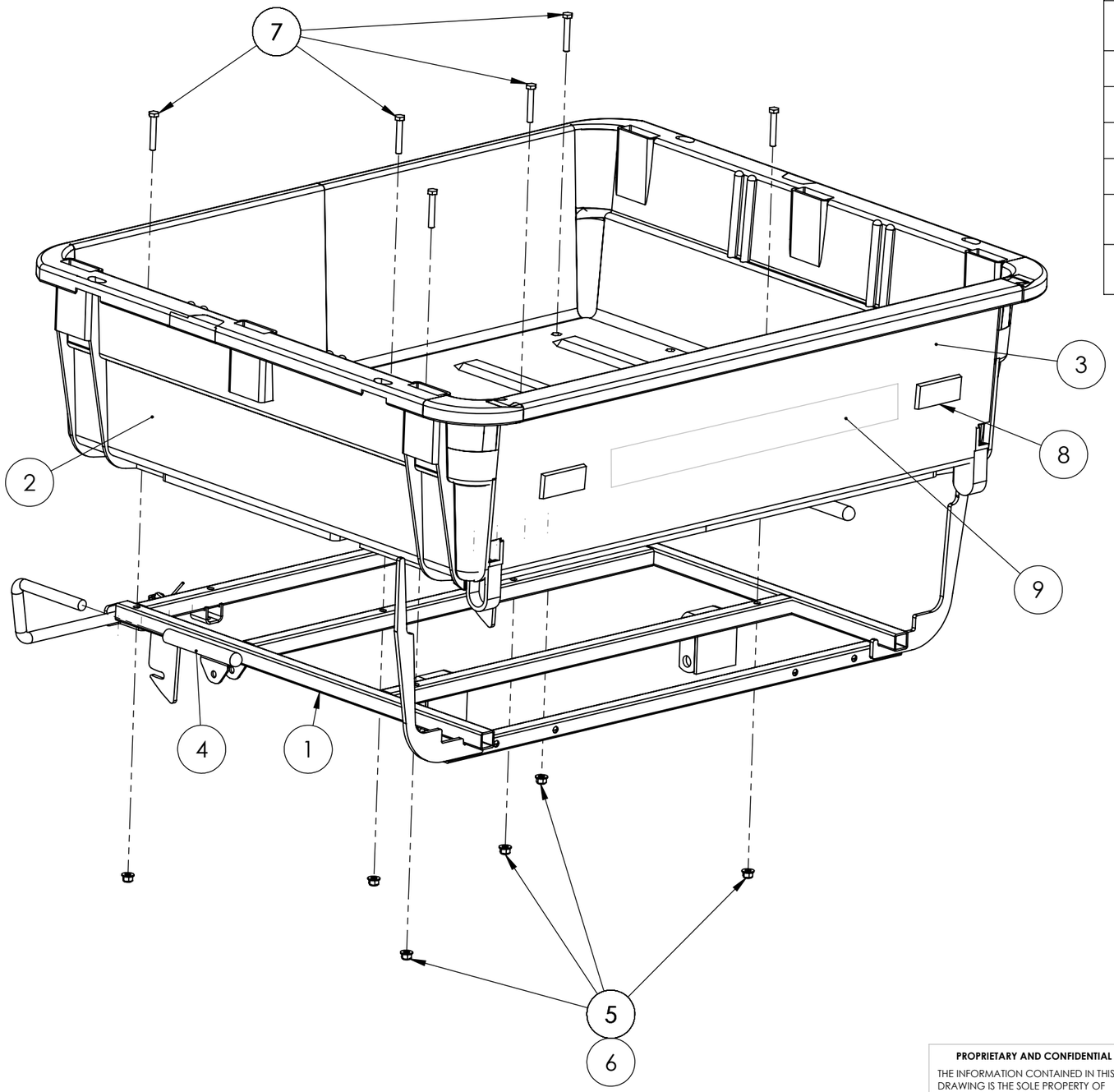

ITEM NO.	PART NUMBER	DESCRIPTION	Default/ QTY.
1	18564-2	WDMT, POLY BED FRAME-BLK	1
2	2-18356	BED, DUMP (STRUC FOAM)	1
3	2-18357	TAILGATE, UTV - DUMP BED STRUC FOAM	1
4	2-70241	RUBBER TUBE, BED LATCH COVER	2
5	2-50007	NUT, 5/16-18 NYLOCK	6
6	2-50701	WASHER, 5/16 SAE FLAT	6
7	2-50167	BOLT, 5/16IN X 2IN HEX HEAD G5	6
8	2-70150	REFLECTOR-UTV #RE10RB (RED)-ADHESIVE BACK	2
9	19162	DECAL, AML BLK WITH GRY LETTERS	1

**** PRINTED VERSIONS OF THIS DOCUMENT FOR REFERENCE ONLY ****

PROPRIETARY AND CONFIDENTIAL

THE INFORMATION CONTAINED IN THIS DRAWING IS THE SOLE PROPERTY OF ASW, LLC. ANY REPRODUCTION IN PART OR AS A WHOLE WITHOUT THE WRITTEN PERMISSION OF ASW, LLC IS PROHIBITED.

UNLESS OTHERWISE SPECIFIED:
DIMENSIONS ARE IN INCHES
TOLERANCES:
FRACTIONAL ± 1/16"
ANGULAR: MACH ± 1°
X.X ± 0.05
X.XX ± 0.01
X.XXX ±0.005 BEND ± 2°

INTERPRET GEOMETRIC TOLERANCING PER:

MATERIAL

FINISH

DO NOT SCALE DRAWING

	NAME	DATE
DRAWN	RHW	6/23/2021
CHECKED	XXX	
ENG APPR.		
MFG APPR.		
Q.A.		

COMMENTS:

AMERICAN LANDMASTER

TITLE:

ASM, POLY BED

SIZE	DWG. NO.	REV
B	18984 POLY BED	0

SCALE: 1:20 WEIGHT: SHEET 1 OF 1

ITEM NO.	PART NUMBER	DESCRIPTION	STATION 6/QTY.
1	18164	FENDER, REAR LH - 48	1
2	18165	FENDER, REAR RH - 48	1
3	15823	NUT, CLIP ON TAPPED - M6 X 1.0; 11 GA MA	8
4	18134	SCREW, M6 X 1 X 20 WIDE FLG BUTT HD SS	12

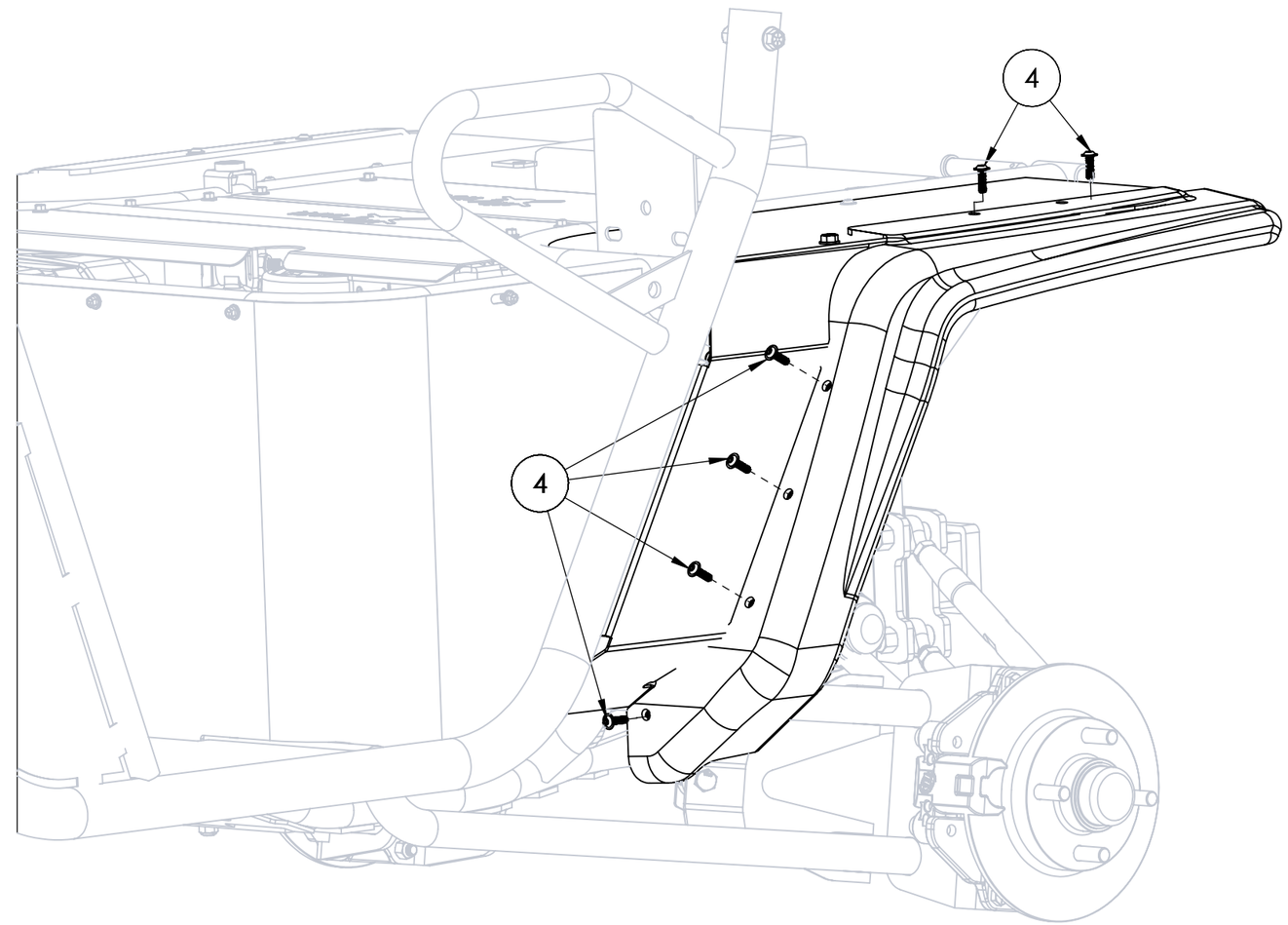

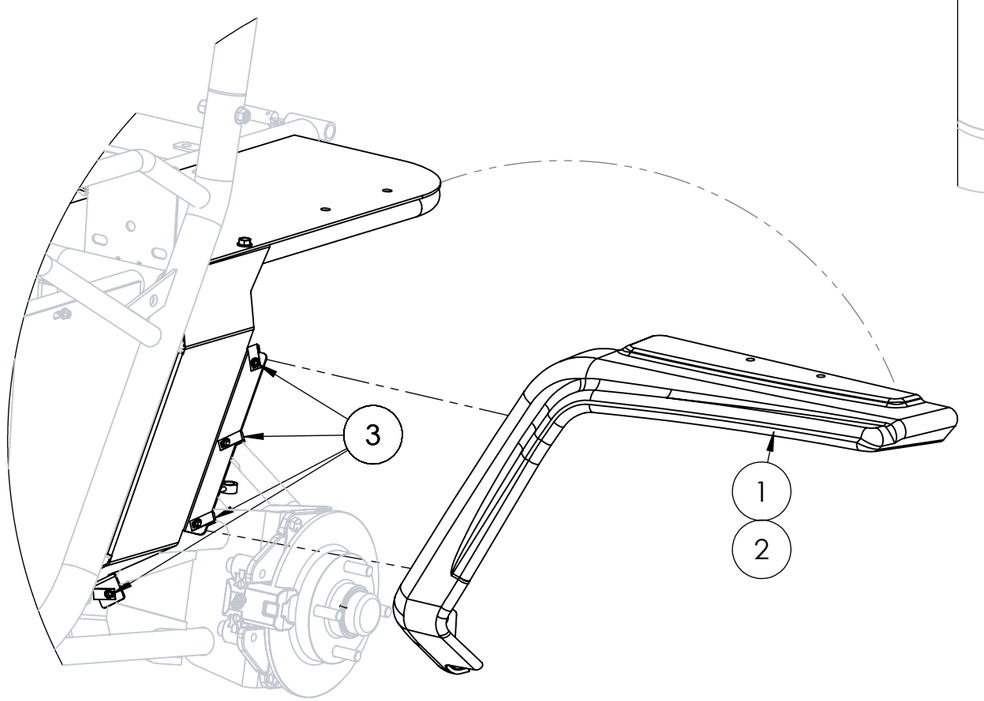

**** PRINTED VERSIONS OF THIS DOCUMENT FOR REFERENCE ONLY ****

PROPRIETARY AND CONFIDENTIAL

THE INFORMATION CONTAINED IN THIS DRAWING IS THE SOLE PROPERTY OF ASW, LLC. ANY REPRODUCTION IN PART OR AS A WHOLE WITHOUT THE WRITTEN PERMISSION OF ASW, LLC IS PROHIBITED.

UNLESS OTHERWISE SPECIFIED:
DIMENSIONS ARE IN INCHES
TOLERANCES:
FRACTIONAL ± 1/16"
ANGULAR: MACH ± 1°
X.X ± 0.05
X.XX ± 0.01
X.XXX ± 0.005 BEND ± 2°

INTERPRET GEOMETRIC TOLERANCING PER:

MATERIAL

FINISH

DO NOT SCALE DRAWING

	NAME	DATE
DRAWN	RHW	11/25/2020
CHECKED	XXX	
ENG APPR.		
MFG APPR.		
Q.A.		

COMMENTS:

AMERICAN LANDMASTER

TITLE:

REAR FENDER ASSEMBLY

SIZE	DWG. NO.	REV
B	18984 REAR FENDER ASSEMBLY	0

SCALE: 1:50 WEIGHT: SHEET 1 OF 1

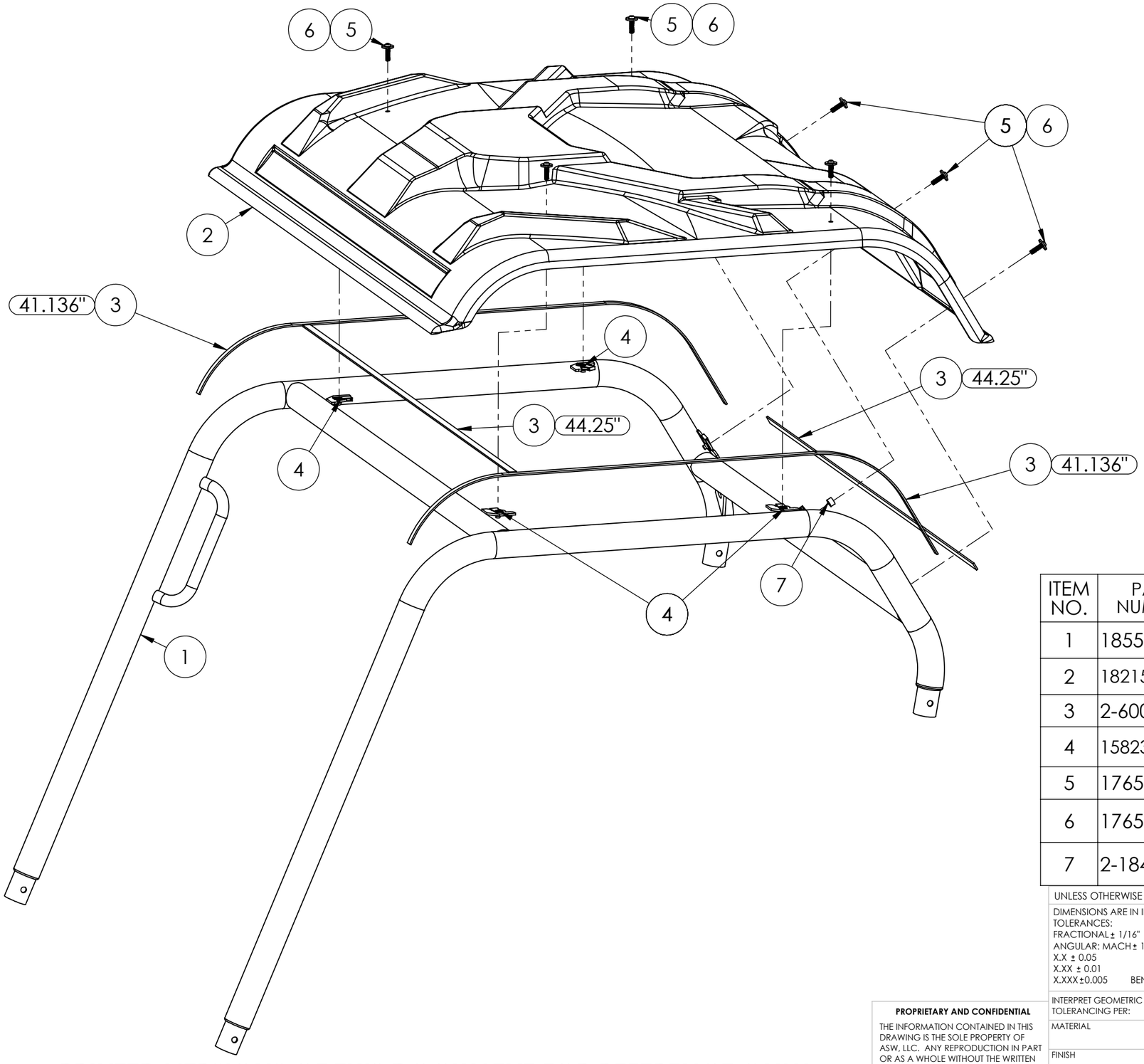

ITEM NO.	PART NUMBER	DESCRIPTION	QTY.
1	18551-2	WDMT, OH ROPS MY21 - BLK	1
2	18215	ROOF, POLY BLACK 2021	1
3	2-60006	TAPE, FOAM - 1/4"X 3/4"	.42
4	15823	NUT, CLIP ON TAPPED - M6 X 1.0; 11 GA MA	7
5	17658	SCREW, M6-1.0 X 25 BLACK BHSS	7
6	17659	WASHER, 1/4 X 3/4 FLAT SEALING BLACK	7
7	2-18415	SPACER, 1/2 X 5/16 - BLK PLASTIC	1

UNLESS OTHERWISE SPECIFIED:
DIMENSIONS ARE IN INCHES
TOLERANCES:
FRACTIONAL ± 1/16"
ANGULAR: MACH ± 1°
X.X ± 0.05
X.XX ± 0.01
X.XXX ± 0.005 BEND ± 2°

INTERPRET GEOMETRIC TOLERANCING PER:

MATERIAL

FINISH

DO NOT SCALE DRAWING

	NAME	DATE
DRAWN	VJR	1/26/2021
CHECKED	XXX	
ENG APPR.		
MFG APPR.		
Q.A.		

COMMENTS:

PROPRIETARY AND CONFIDENTIAL

THE INFORMATION CONTAINED IN THIS DRAWING IS THE SOLE PROPERTY OF ASW, LLC. ANY REPRODUCTION IN PART OR AS A WHOLE WITHOUT THE WRITTEN PERMISSION OF ASW, LLC IS PROHIBITED.

AMERICAN LANDMASTER

TITLE:

KIT, ROOF POLY - L SERIES

SIZE B | DWG. NO. 18984 ROOF ASSEMBLY | REV 0

SCALE: 1:20 | WEIGHT: | SHEET 1 OF 1

**** PRINTED VERSIONS OF THIS DOCUMENT FOR REFERENCE ONLY ****

ITEM NO.	PART NUMBER	DESCRIPTION	STATION 6/QTY.
1	18168	PANEL, SEATBACK	1
2	2-50087	BOLT, 1/4"-20 X 1"	4
3	18071	CUSHION, SEAT BOTTOM FORMED	1
4	18070	CUSHION, SEAT BACK FORMED	1
5	18598-2	BRKT, SEAT MOUNT - BLK	2
6	16679	SCREW, 1/4-20 X 1.75 FTPMS ZN	5
7	18523	SPACER 0.75OD X 0.50 X 0.25ID LDPE BLK	5

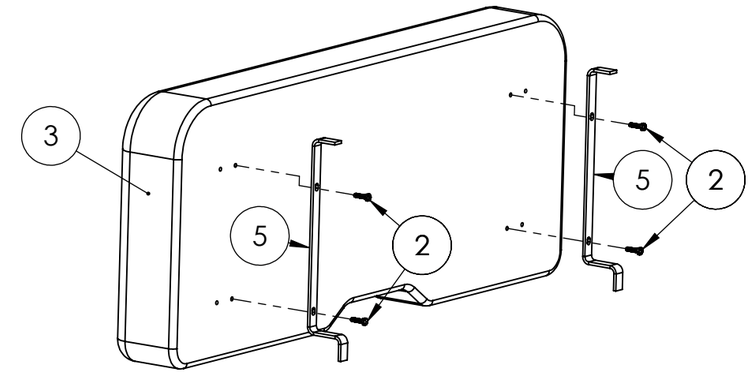

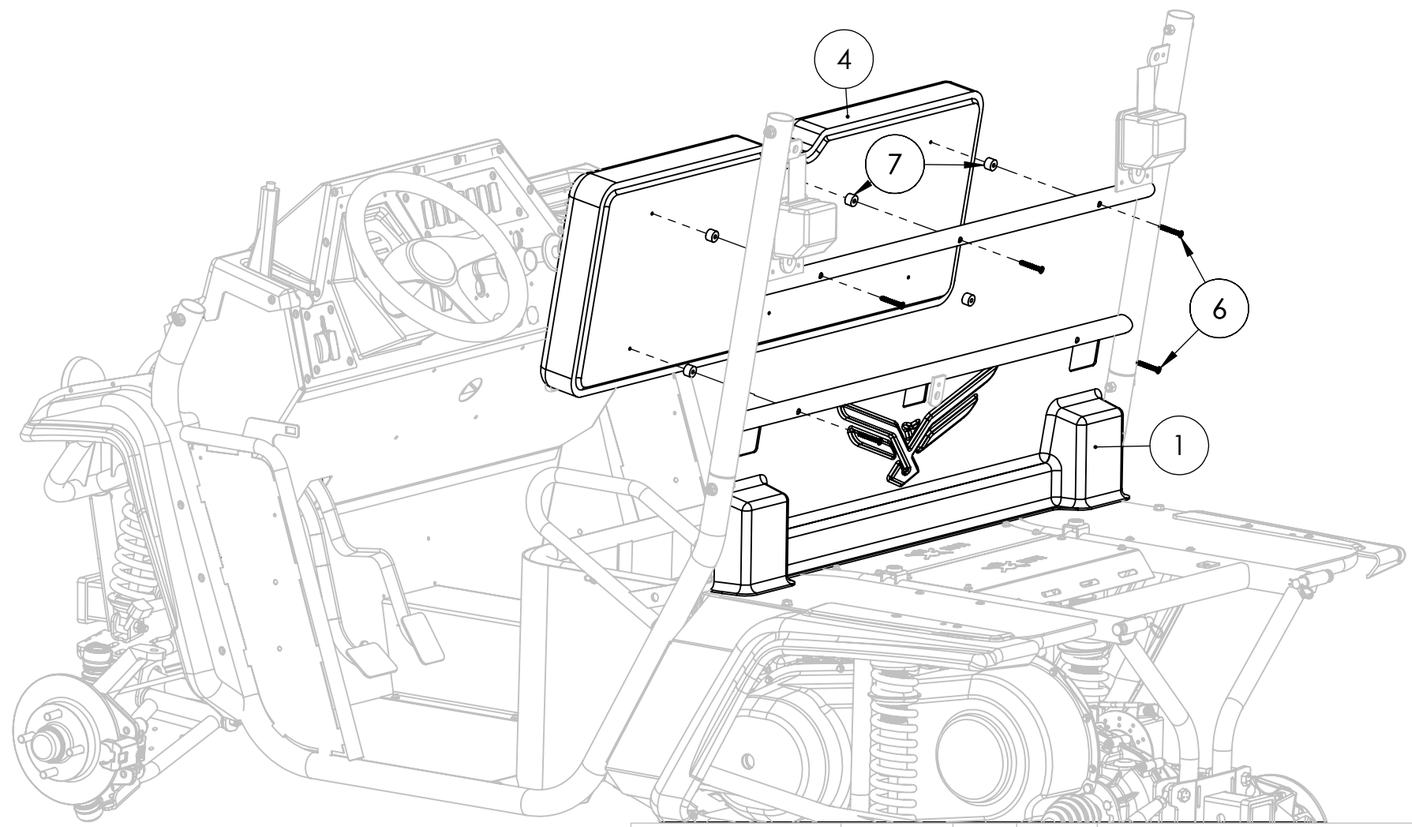

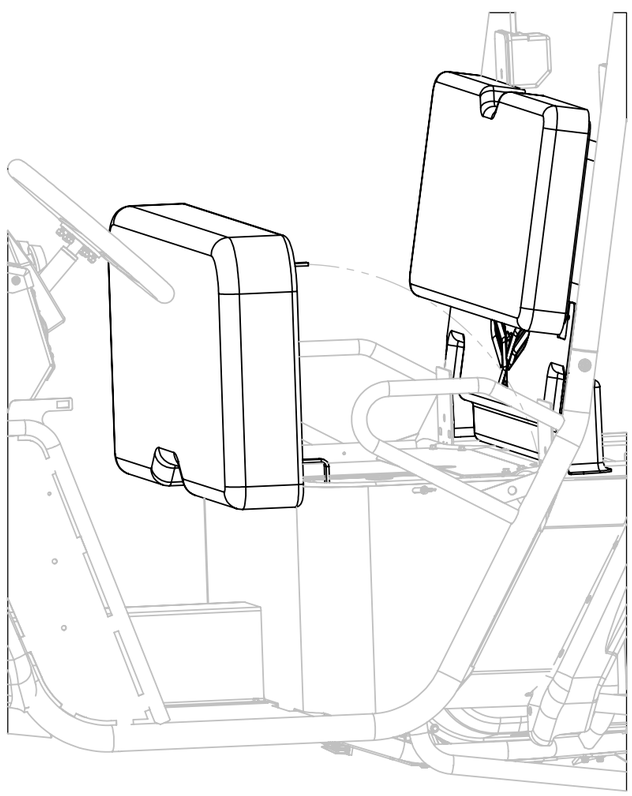

PROPRIETARY AND CONFIDENTIAL

THE INFORMATION CONTAINED IN THIS DRAWING IS THE SOLE PROPERTY OF ASW, LLC. ANY REPRODUCTION IN PART OR AS A WHOLE WITHOUT THE WRITTEN PERMISSION OF ASW, LLC IS PROHIBITED.

UNLESS OTHERWISE SPECIFIED:
DIMENSIONS ARE IN INCHES
TOLERANCES:
FRACTIONAL ± 1/16"
ANGULAR: MACH ± 1°
X.X ± 0.05
X.XX ± 0.01
X.XXX ±0.005 BEND ± 2°

INTERPRET GEOMETRIC TOLERANCING PER:

MATERIAL

FINISH

DO NOT SCALE DRAWING

	NAME	DATE
DRAWN	RHW	6/3/2021
CHECKED	XXX	
ENG APPR.		
MFG APPR.		
Q.A.		

COMMENTS:

AMERICAN LANDMASTER

TITLE:

18984 SEAT ASSEMBLY

SIZE	DWG. NO.	REV
B	18984 SEAT ASSEMBLY	0

SCALE: 1:50 WEIGHT: SHEET 1 OF 1

**** PRINTED VERSIONS OF THIS DOCUMENT FOR REFERENCE ONLY ****

ITEM NO.	PART NUMBER	DESCRIPTION	STATION 6/QTY.
1	2-50630	SCREW, #10 X 3/4IN HEX WASHER TEK-BLK	7
2	2-50770	WASHER, #10 SAE FLAT	7
3	19021	SURROUND, 4WD SEAT - MATTE BLK	1

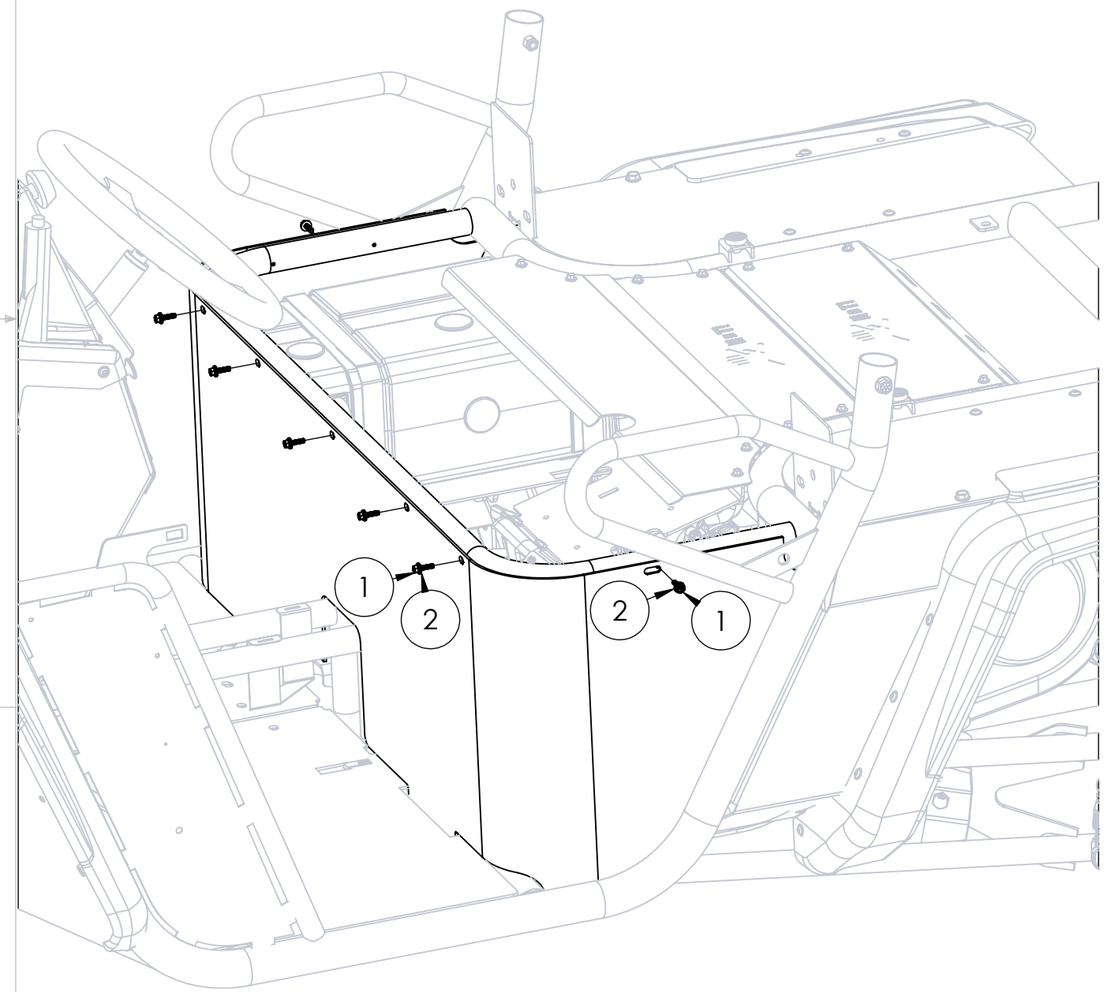

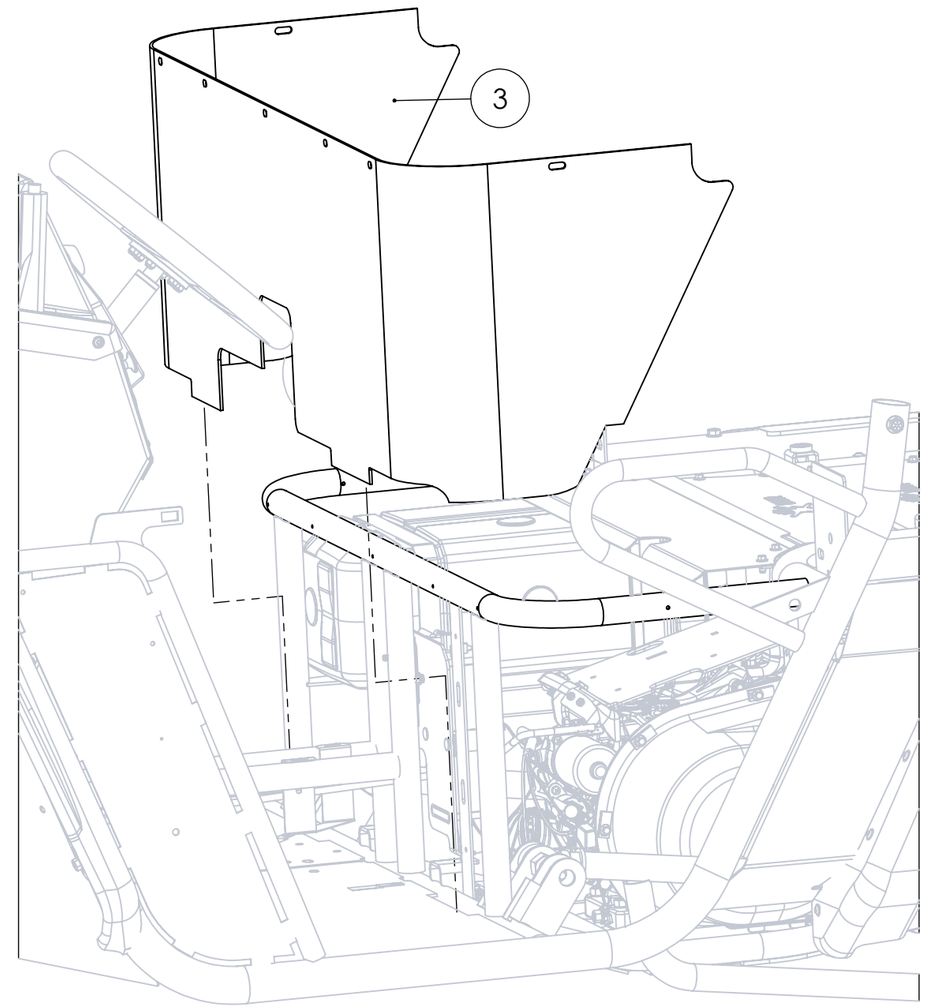

**** PRINTED VERSIONS OF THIS DOCUMENT FOR REFERENCE ONLY ****

PROPRIETARY AND CONFIDENTIAL

THE INFORMATION CONTAINED IN THIS DRAWING IS THE SOLE PROPERTY OF ASW, LLC. ANY REPRODUCTION IN PART OR AS A WHOLE WITHOUT THE WRITTEN PERMISSION OF ASW, LLC IS PROHIBITED.

UNLESS OTHERWISE SPECIFIED:
DIMENSIONS ARE IN INCHES
TOLERANCES:
FRACTIONAL ± 1/16"
ANGULAR: MACH ± 1°
X.X ± 0.05
X.XX ± 0.01
X.XXX ± 0.005 BEND ± 2°

INTERPRET GEOMETRIC TOLERANCING PER:

MATERIAL

FINISH

DO NOT SCALE DRAWING

	NAME	DATE
DRAWN	RHW	11/25/2020
CHECKED	XXX	
ENG APPR.		
MFG APPR.		
Q.A.		

COMMENTS:

AMERICAN LANDMASTER

TITLE:

SEAT SURROUND ASSEMBLY

SIZE	DWG. NO.	REV
B	18984 SEAT SURROUND ASSEMBLY	0

SCALE: 1:50 WEIGHT: SHEET 1 OF 1

ITEM NO.	PART NUMBER	DESCRIPTION	STATION 6/QTY.
1	18815	NET, SIDENET STD DRIVER	1
2	18848	NET, SIDENET STD PASSENGER	1

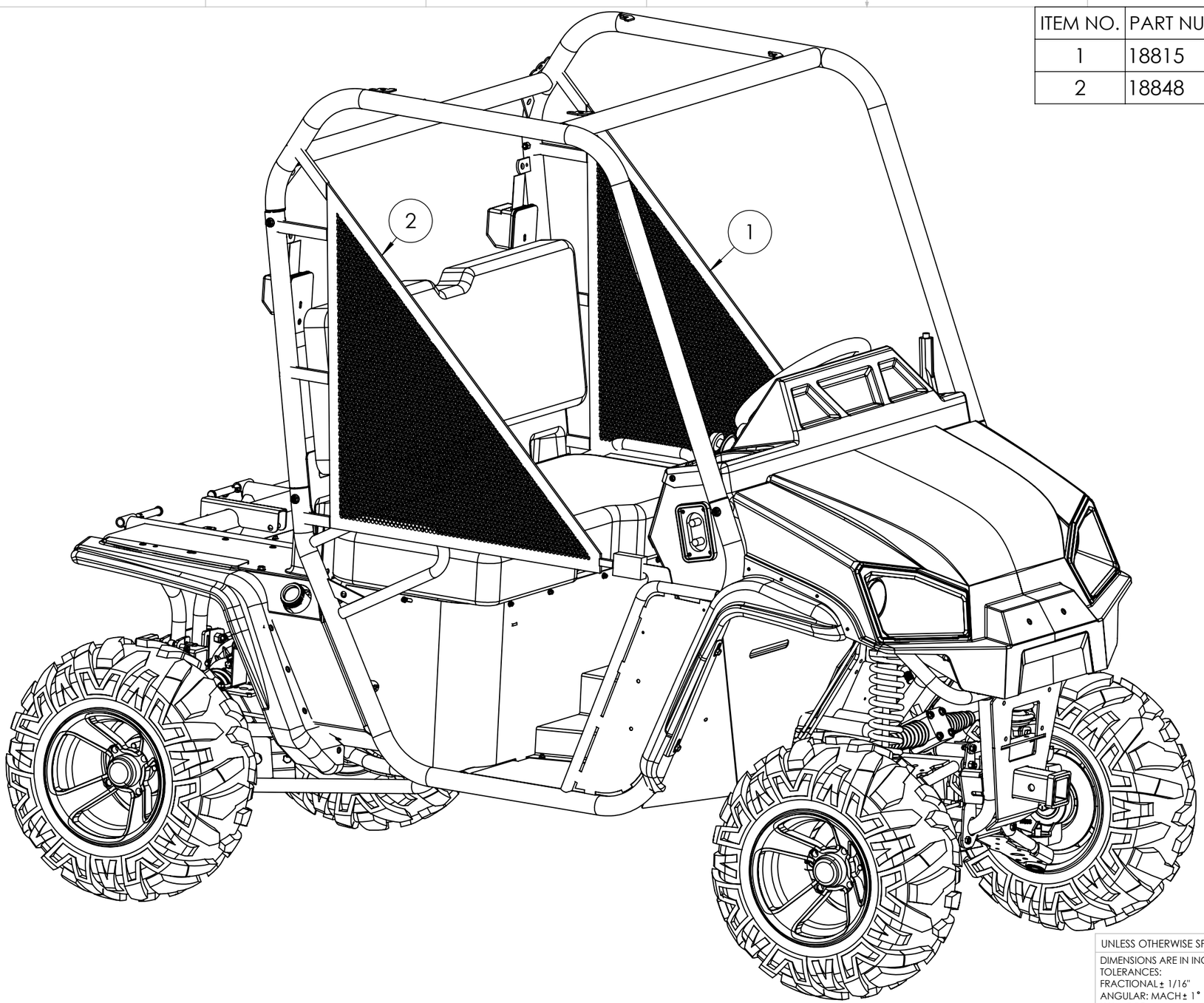

UNLESS OTHERWISE SPECIFIED:
DIMENSIONS ARE IN INCHES
TOLERANCES:
FRACTIONAL ± 1/16"
ANGULAR: MACH ± 1°
X.X ± 0.05
X.XX ± 0.01
X.XXX ± 0.005 BEND ± 2°

INTERPRET GEOMETRIC TOLERANCING PER:

MATERIAL

FINISH

DO NOT SCALE DRAWING

	NAME	DATE
DRAWN	RHW	1/8/2021
CHECKED	XXX	
ENG APPR.		
MFG APPR.		
Q.A.		

COMMENTS:

PROPRIETARY AND CONFIDENTIAL

THE INFORMATION CONTAINED IN THIS DRAWING IS THE SOLE PROPERTY OF ASW, LLC. ANY REPRODUCTION IN PART OR AS A WHOLE WITHOUT THE WRITTEN PERMISSION OF ASW, LLC IS PROHIBITED.

AMERICAN LANDMASTER

TITLE:

18984 SIDE NET ASSEMBLY

SIZE	DWG. NO.	REV
B	18984 SIDE NET ASSEMBLY	0

SCALE: 1:50 WEIGHT: SHEET 1 OF 1

**** PRINTED VERSIONS OF THIS DOCUMENT FOR REFERENCE ONLY ****

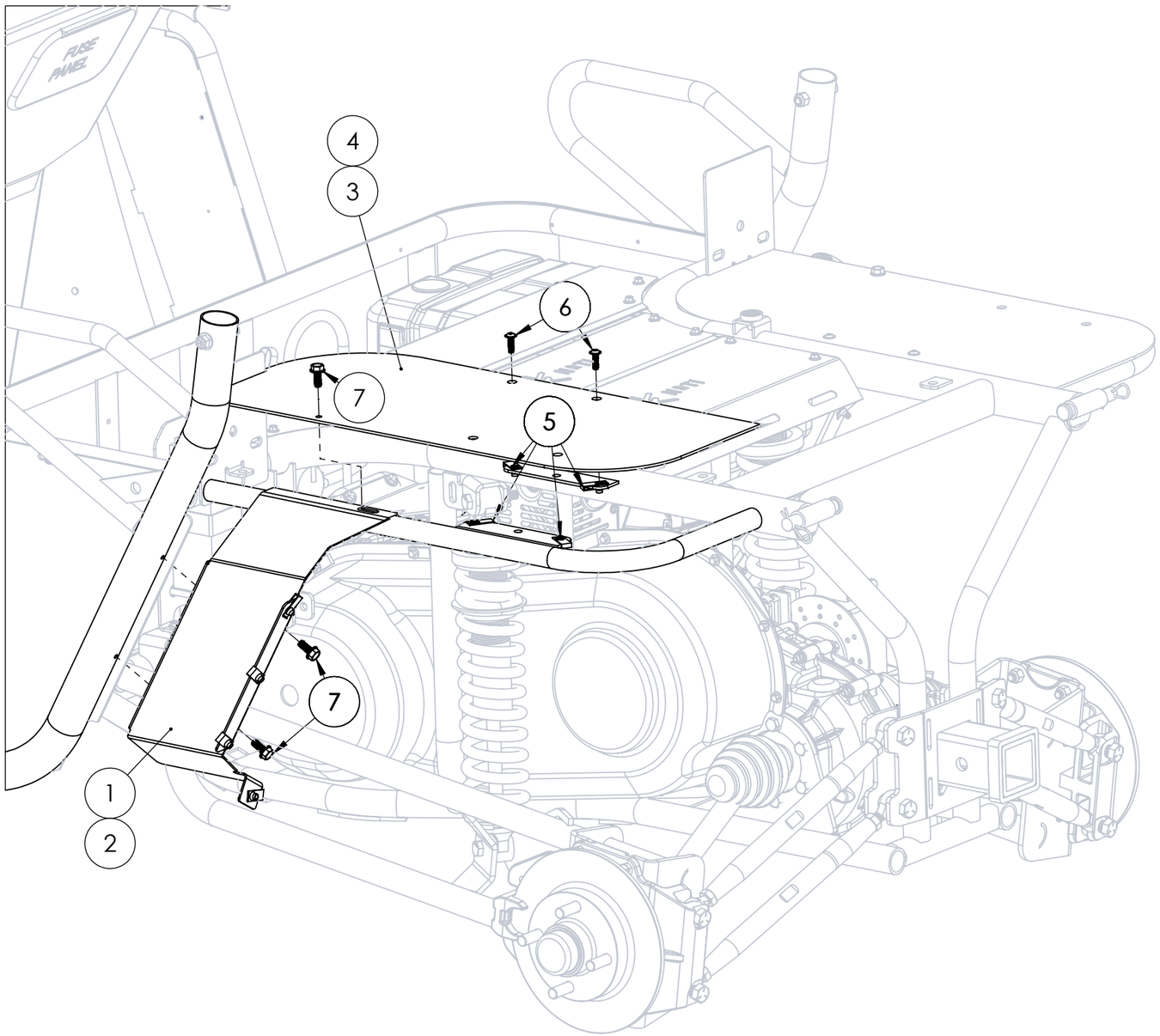

ITEM NO.	PART NUMBER	DESCRIPTION	STATION 6/QTY.
1	18155-9	SKIRT, SIDE LH - SILVER	1
2	18156-9	SKIRT, SIDE RH - SILVER	1
3	18508	PANEL, FENDER TOP LH NO DUMP	1
4	18509	PANEL, FENDER TOP RH	1
5	15823	NUT, CLIP ON TAPPED - M6 X 1.0; 11 GA MA	8
6	18134	SCREW, M6 X 1 X 20 WIDE FLG BUTT HD SS	4
7	19076	SCREW, 5/16 X1.00 UNSLT HWSDS	6

**** PRINTED VERSIONS OF THIS DOCUMENT FOR REFERENCE ONLY ****

PROPRIETARY AND CONFIDENTIAL

THE INFORMATION CONTAINED IN THIS DRAWING IS THE SOLE PROPERTY OF ASW, LLC. ANY REPRODUCTION IN PART OR AS A WHOLE WITHOUT THE WRITTEN PERMISSION OF ASW, LLC IS PROHIBITED.

UNLESS OTHERWISE SPECIFIED:
DIMENSIONS ARE IN INCHES
TOLERANCES:
FRACTIONAL ± 1/16"
ANGULAR: MACH ± 1°
X.X ± 0.05
X.XX ± 0.01
X.XXX ±0.005 BEND ± 2°

INTERPRET GEOMETRIC TOLERANCING PER:

MATERIAL

FINISH

DO NOT SCALE DRAWING

	NAME	DATE
DRAWN	RHW	11/25/2020
CHECKED	XXX	
ENG APPR.		
MFG APPR.		
Q.A.		

COMMENTS:

AMERICAN LANDMASTER

TITLE:

SKIRT AND UPPER FENDER ASSEMBLY

SIZE	DWG. NO.	REV
B	18984 SKIRT AND UPPER FENDER ASSEMBLY	0

SCALE: 1:50 WEIGHT: SHEET 1 OF 1

ITEM NO.	PART NUMBER	DESCRIPTION	Default/ QTY.
1	18894	BED, STEEL BED ASSY	1
2	2-50013	NUT, 3/8 KEPS	4
3	2-50740	WASHER, 3/8IN USS FLAT WASHER	4
4	17660	PIN, BRIDGE .093 - ZINC	2
5	17661	PIN, CLEVIS - 5/8 X 3.50 ZINC	2
6	2-50212	BOLT, 3/8IN X 3-1/4IN HEX HEAD G5-ZINC	2

**** PRINTED VERSIONS OF THIS DOCUMENT FOR REFERENCE ONLY ****

PROPRIETARY AND CONFIDENTIAL

THE INFORMATION CONTAINED IN THIS DRAWING IS THE SOLE PROPERTY OF ASW, LLC. ANY REPRODUCTION IN PART OR AS A WHOLE WITHOUT THE WRITTEN PERMISSION OF ASW, LLC IS PROHIBITED.

UNLESS OTHERWISE SPECIFIED:
DIMENSIONS ARE IN INCHES
TOLERANCES:
FRACTIONAL ± 1/16"
ANGULAR: MACH ± 1°
X.X ± 0.05
X.XX ± 0.01
X.XXX ± 0.005 BEND ± 2°

INTERPRET GEOMETRIC TOLERANCING PER:

MATERIAL

FINISH

DO NOT SCALE DRAWING

	NAME	DATE
DRAWN	XXX	xx/xx/xxxx
CHECKED	XXX	
ENG APPR.		
MFG APPR.		
Q.A.		

COMMENTS:

AMERICAN LANDMASTER

TITLE:

SIZE B | DWG. NO. 18984 STEEL BED ASSEMBLY | REV 0

SCALE: 1:50 | WEIGHT: | SHEET 1 OF 2

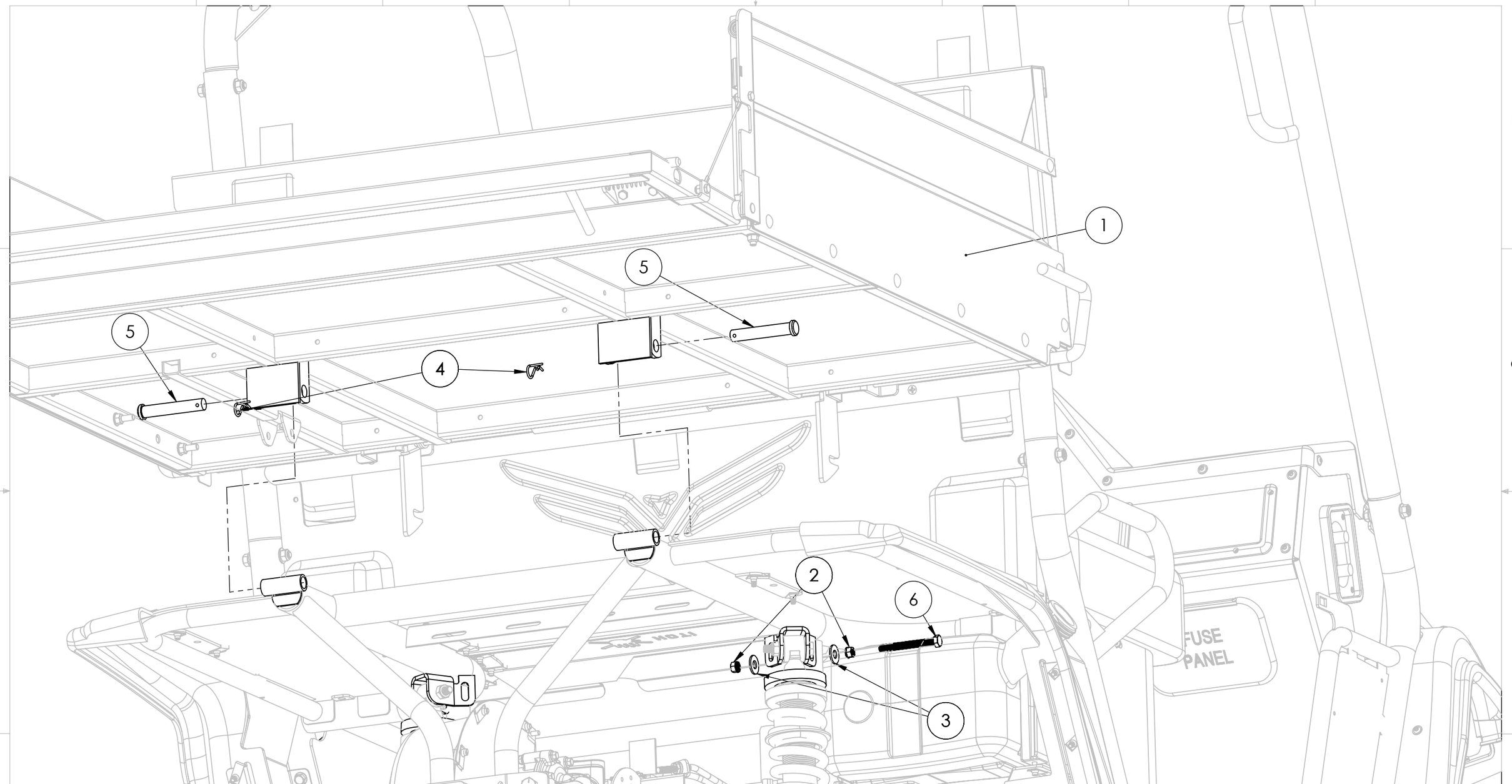

PROPRIETARY AND CONFIDENTIAL

THE INFORMATION CONTAINED IN THIS DRAWING IS THE SOLE PROPERTY OF ASW, LLC. ANY REPRODUCTION IN PART OR AS A WHOLE WITHOUT THE WRITTEN PERMISSION OF ASW, LLC IS PROHIBITED.

UNLESS OTHERWISE SPECIFIED:
DIMENSIONS ARE IN INCHES
TOLERANCES:
FRACTIONAL ± 1/16"
ANGULAR: MACH ± 1°
X.X ± 0.05
X.XX ± 0.01
X.XXX ±0.005 BEND ± 2°

INTERPRET GEOMETRIC TOLERANCING PER:

MATERIAL

FINISH

DO NOT SCALE DRAWING

	NAME	DATE
DRAWN	XXX	xx/xx/xxxx
CHECKED	XXX	
ENG APPR.		
MFG APPR.		
Q.A.		

COMMENTS:

AMERICAN LANDMASTER

TITLE:

SIZE B | DWG. NO. 18984 STEEL BED ASSEMBLY | REV 0

SCALE: 1:50 | WEIGHT: | SHEET 2 OF 2

**** PRINTED VERSIONS OF THIS DOCUMENT FOR REFERENCE ONLY ****

ITEM NO.	PART NUMBER	DESCRIPTION	Default/ QTY.
1	19401-1	WDMT, CONVERTIBLE BED SIDE - LH	1
2	19402-1	WDMT, CONVERTIBLE BED SIDE - RH	1
3	18477-1	WDMT, STEEL BED TAILGATE ASSY-RAW	1
4	18238	LATCH, SPRING BOLT RH	1
5	18239	LATCH, SPRING BOLT LH	1
6	18474-1	WDMT, STEEL FLAT BED ASSY-RAW	1
7	18527	BOLT, 1/4"-20 x 5/8 HHCS ZINC	8
8	15106	NUT, 1/4-20 NYLOCK	8
9	19286	BOLT, 5/16"-18 X 2-1/4" CARRIAGE ZINC GA	18
10	16300	NUT, 5/16"-18 NYLON LOCK W/ FLANGE ZN	18
11	18240	CABLE, BED LIMITING	2
12	2-18413	BED BUMPER 1.5 INCH (RUBBER)	2
13	18913	SPACER, 1" OD X 0.5" ID X 3/8"L NYLON	2
14	2-70150	REFLECTOR-UTV #RE10RB (RED)-ADHESIVE BACK	2
15	19162	DECAL, AML BLK WITH GRY LETTERS	1

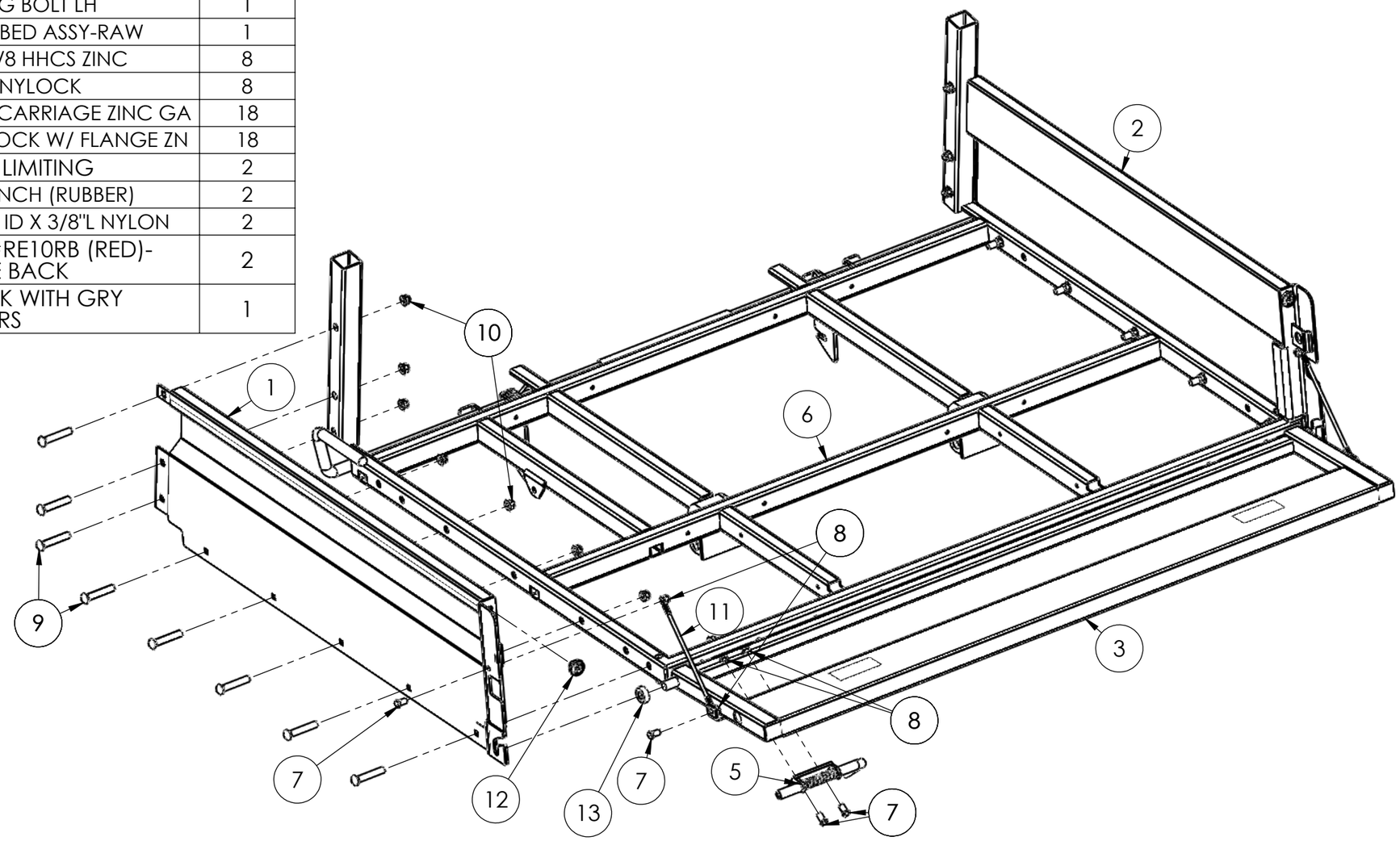

UNLESS OTHERWISE SPECIFIED:
DIMENSIONS ARE IN INCHES
TOLERANCES:
FRACTIONAL ± 1/16"
ANGULAR: MACH ± 1°
X.X ± 0.05
X.XX ± 0.01
X.XXX ±0.005 BEND ± 2°
INTERPRET GEOMETRIC TOLERANCING PER:
MATERIAL
FINISH
DO NOT SCALE DRAWING

	NAME	DATE
DRAWN	RHW	2/25/2021
CHECKED	XXX	
ENG APPR.		
MFG APPR.		
Q.A.		

COMMENTS:

PROPRIETARY AND CONFIDENTIAL
THE INFORMATION CONTAINED IN THIS DRAWING IS THE SOLE PROPERTY OF ASW, LLC. ANY REPRODUCTION IN PART OR AS A WHOLE WITHOUT THE WRITTEN PERMISSION OF ASW, LLC IS PROHIBITED.

AMERICAN LANDMASTER

TITLE:
BED, STEEL BED ASSY

SIZE B | DWG. NO. 18984 STEEL BED | REV 0

SCALE: 1:20 | WEIGHT: | SHEET 1 OF 2

**** PRINTED VERSIONS OF THIS DOCUMENT FOR REFERENCE ONLY ****

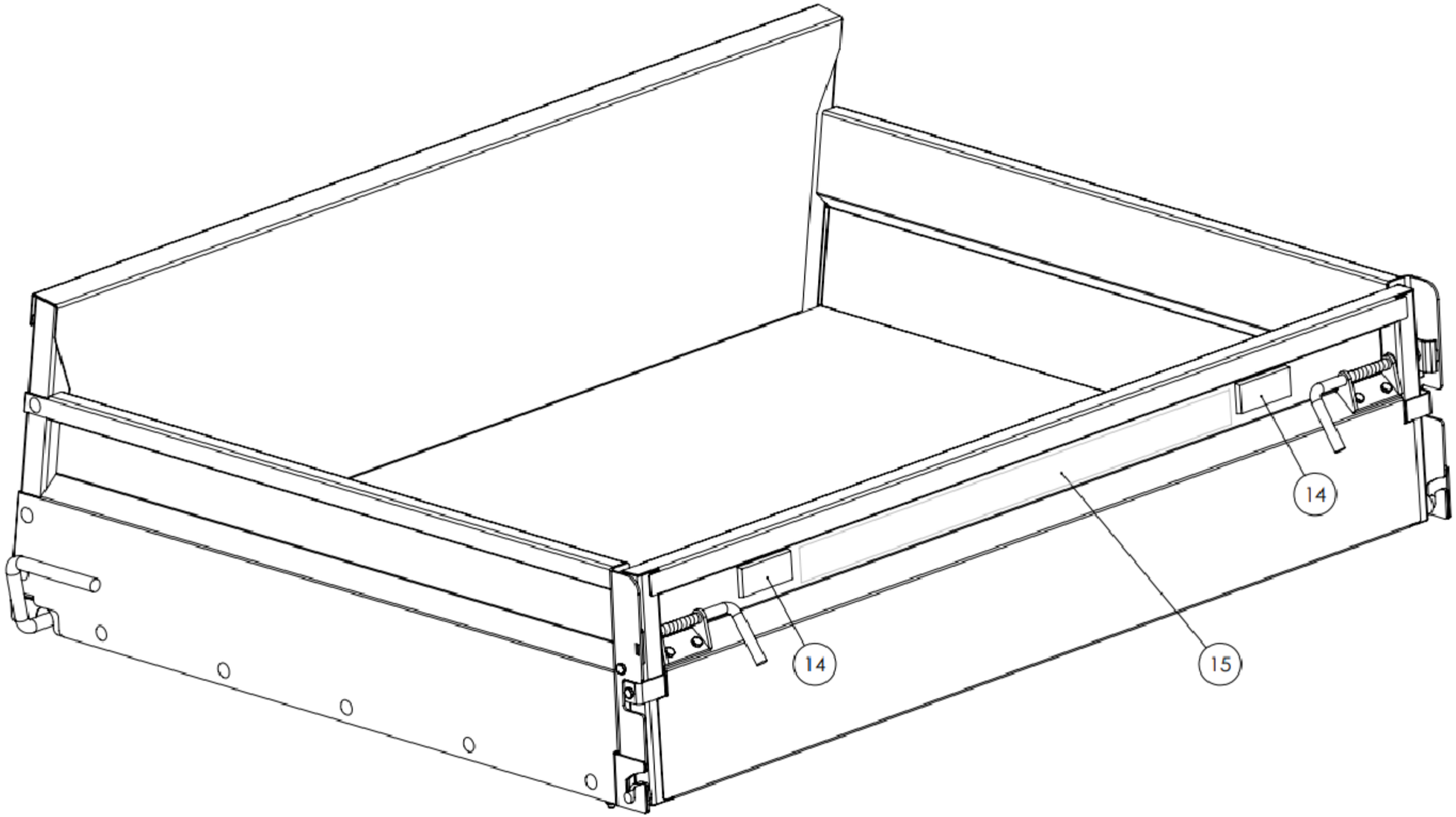

PROPRIETARY AND CONFIDENTIAL

THE INFORMATION CONTAINED IN THIS DRAWING IS THE SOLE PROPERTY OF ASW, LLC. ANY REPRODUCTION IN PART OR AS A WHOLE WITHOUT THE WRITTEN PERMISSION OF ASW, LLC IS PROHIBITED.

UNLESS OTHERWISE SPECIFIED:
DIMENSIONS ARE IN INCHES
TOLERANCES:
FRACTIONAL ± 1/16"
ANGULAR: MACH ± 1°
X.X ± 0.05
X.XX ± 0.01
X.XXX ±0.005 BEND ± 2°

INTERPRET GEOMETRIC TOLERANCING PER:

MATERIAL

FINISH

DO NOT SCALE DRAWING

	NAME	DATE
DRAWN	XXX	xx/xx/xxxx
CHECKED	XXX	
ENG APPR.		
MFG APPR.		
Q.A.		

COMMENTS:

AMERICAN LANDMASTER

TITLE:

BED, STEEL BED ASSY

SIZE	DWG. NO.	REV
B	18984 STEEL BED	0

SCALE: 1:20 WEIGHT: SHEET 2 OF 2

**** PRINTED VERSIONS OF THIS DOCUMENT FOR REFERENCE ONLY ****

ITEM NO.	PART NUMBER	DESCRIPTION	STATION 6/QTY.
1	18158	BRKT, 4WD TUNNEL	1
2	15823	NUT, CLIP ON TAPPED - M6 X 1.0; 11 GA MA	6
3	14426	BOLT, M6 X 1.0 X 14	6

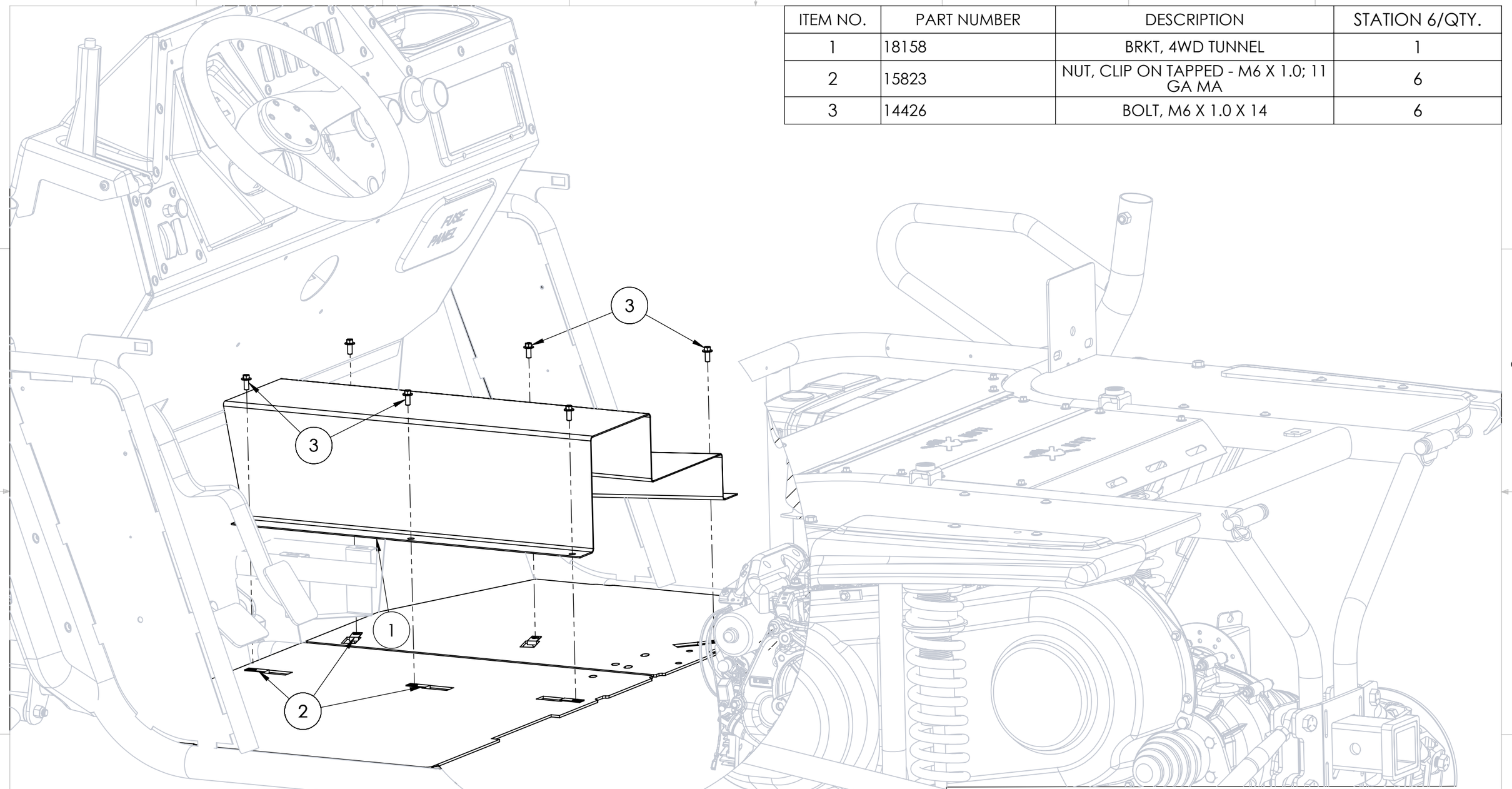

PROPRIETARY AND CONFIDENTIAL

THE INFORMATION CONTAINED IN THIS DRAWING IS THE SOLE PROPERTY OF ASW, LLC. ANY REPRODUCTION IN PART OR AS A WHOLE WITHOUT THE WRITTEN PERMISSION OF ASW, LLC IS PROHIBITED.

UNLESS OTHERWISE SPECIFIED:
DIMENSIONS ARE IN INCHES
TOLERANCES:
FRACTIONAL ± 1/16"
ANGULAR: MACH ± 1°
X.X ± 0.05
X.XX ± 0.01
X.XXX ± 0.005 BEND ± 2°

INTERPRET GEOMETRIC TOLERANCING PER:

MATERIAL

FINISH

DO NOT SCALE DRAWING

	NAME	DATE
DRAWN	RHW	11/25/2020
CHECKED	XXX	
ENG APPR.		
MFG APPR.		
Q.A.		

COMMENTS:

AMERICAN LANDMASTER

TITLE:

TUNNEL ASSEMBLY

SIZE	DWG. NO.	REV
B	18984 TUNNEL ASSEMBLY	0
SCALE: 1:50	WEIGHT:	SHEET 1 OF 1

**** PRINTED VERSIONS OF THIS DOCUMENT FOR REFERENCE ONLY ****