THIS DRAWING IS COPYRIGHTED AND CONFIDENTIAL TO SCHAFER DRIVELINE, LLC. THOSE HAVING ACCESS TO THIS WORK MAY NOT COPY IT, USE IT OR DISCLOSE THE INFORMATION CONTAINED WITHIN THIS WORK WITHOUT THE EXPRESS WRITTEN AUTHORIZATION OF SCHAFER DRIVELINE, LLC. UNAUTHORIZED USE MAY RESULT IN PROSECUTION.

WORK ORDER	REV	REVISION DESCRIPTION	SHEET	ZONE	DATE	CHG BY	APP BY
521-105	--	RELEASED FOR SERVICE	--	--	02/09/21	TWJ	SS

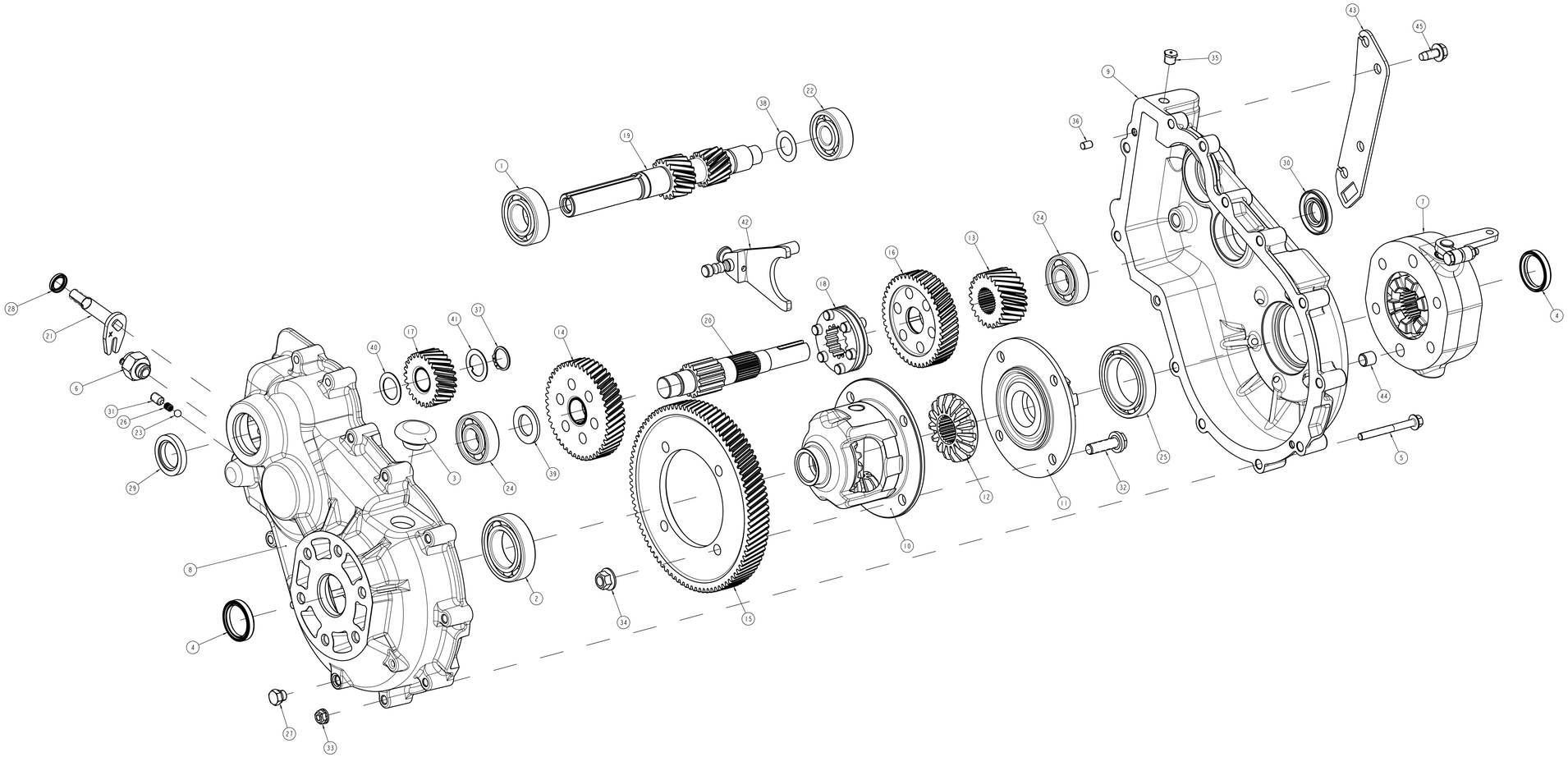

ITEM NO	PART NUMBER	QTY	DESCRIPTION
45	527A6-1	2	SCREW, SELF-THREADING, 5/16-18 X .725
44	026HP100	2	BUSHING, DOWEL, .375 X .500
43	012TF339	1	BRACKET, SHIFTER CABLE
42	012SV118X	1	ASSEMBLY, SHIFT ROD
41	012HS126	1	WASHER, THRUST, KEYED
40	012HS125	1	WASHER, THRUST, .805 X 1.190 X .031
39	012HS121	1	SPACER, FLAT, .790 X 1.378 X .108
38	012HS120-15	1	WASHER, SHIM, ADJUSTING
37	012HR128	1	RING, RETAINING, EXTERNAL, .780 SHAFT
36	012HP120	2	PIN, DOWEL, .250 DIAMETER
35	012HN140	1	VENT, 1/8 NPTF
34	012HN138	4	NUT, FLANGE, LOCK, 3/8-24
33	012HN120	13	NUT, FLANGE, 1/4-20 UNC
32	012HM129	4	BOLT, FLANGE HEAD, 3/8-24 X 1.25
31	012HM112	1	SCREW, SET, 5/16-18 X .500
30	012HH140	1	SEAL, OIL, .750 SHAFT, 1.625 BORE
29	012HH128	1	SEAL, OIL, .25 MM SHAFT, 1.499 BORE
28	012HH122	1	SEAL, OIL, .12 MM SHAFT, .718 BORE
27	012HG145	1	PLUG, HEX HEAD, 3/8-24 STRAIGHT THREAD, O-RING
26	012HE101	1	SPRING, COMPRESSION
25	012HD142	1	BEARING, BALL, SINGLE ROW, 6909
24	012HD129	2	BEARING, BALL, SINGLE ROW, 6204
23	012HD123	1	BALL, DETENT, .250 DIA
22	012HD111	1	BEARING, BALL, SINGLE ROW, 6303
21	012GV194X	1	ASSEMBLY, ACTUATOR, SHIFT
20	012GS337	1	SHAFT, INTERMEDIATE, FINISH
19	012GS307	1	SHAFT, INPUT, FINISH
18	012GS302	1	CLUTCH, GEAR, FINISH
17	012GS207X	1	ASSEMBLY, GEAR, IDLER
16	012GS204X	1	ASSEMBLY, GEAR, INTERMEDIATE, REVERSE
15	012GS203	1	GEAR, HELICAL, OUTPUT, 90T, FINISH
14	012GS202X	1	ASSEMBLY, GEAR, INTERMEDIATE, FORWARD
13	012GS201	1	GEAR, HELICAL, INTERMEDIATE, 24T, FINISH
12	012GD110	1	SIDE GEAR, DIFFERENTIAL, 16T
11	012DC146	1	FLANGE HALF, DIFFERENTIAL, LOCKING
10	012DA121X	1	ASSEMBLY, DIFFERENTIAL
9	012CH473	1	HOUSING, MACHINED
8	012CC116-X	1	ASSEMBLY, HOUSING AND SHAFT
7	012CB113-X	1	ASSEMBLY, HOUSING, DIFFERENTIAL LOCK
6	002SJ100	1	SWITCH, BALL, TURRET TERMINAL, NC
5	002HM105-1	13	SCREW, FLANGE HEAD
4	002HH112	2	SEAL, OIL, 1.181 (30MM) SHAFT, 1.499 BORE
3	002HG101	1	PLUG, RUBBER
2	002HD111	1	BEARING, BALL, SINGLE ROW, 6007
1	585965	1	BEARING, BALL, SINGLE ROW, 6205

PARTS LIST

527A6-1	SCREW, SELF-THREADING, 5/16-18 X .725	16-24 FT-LBS
012HN138	NUT, FLANGE, LOCK, 3/8-24	55-63 FT.-LBS.
012HN120	NUT, FLANGE, 1/4-20 UNC	100-120 IN.-LBS.
012HM137	SCREW, FLANGE HEAD, 3/8-16UNC X 2.75	25-35 FT-LBS
002SJ100	SWITCH, BALL, TURRET TERMINAL, NC	240-300 IN-LBS
PART NUMBER	DESCRIPTION	TORQUE VALUE

TORQUE CHART

SHEET 1 OF 1	<KC> DENOTES KEY CHARACTERISTIC PER SCHAFER ENGINEERING SPECIFICATION PE0101	DO NOT SCALE DRAWING	GEOMETRIC DIMENSIONING & TOLERANCING PER ANSI Y14.5M
REFERENCES	MATERIAL		NAME / DATE
002AS127	—		DRAWN TWJ 02/09/21
002AJ538			CHECKED SS 02/09/21
SURFACE TREATMENT	HEAT TREATMENT		APPROVED SS 02/09/21
—	—		SCHAFER DRIVELINE, LLC. PRODUCTION, OHIO, USA
R 150 MODEL FSR-12	MADE FROM ——		

<KC1> <KC2> CHG. REV. IN SCALE CHG. IN 1 / 100 MM

UNLESS OTHERWISE SPECIFIED: 2 PLACE DECIMALS ±-. 3 PLACE DECIMALS ±-. ANGLES ±-°

DESCRIPTION: CARRIER ASSEMBLY, GAS LOCKING DIFFERENTIAL.

PART NO: 012AS134-1 REV: --

CHANGE ONLY IN PROVE